Heat Sensor:
1. PICT 10-5 (Assembly
2. Pg 10-8 Manual)

ILLUSTRATION BOOKLET

MOTOR ENCODER, SONAR ENCODER, AND EXTENDER CIRCUIT BOARDS PARTS PICTORIAL

Part of 595-3414

A1

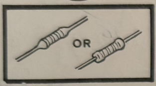

A2

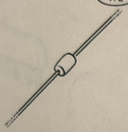

B1

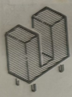

B2

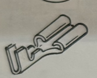

B3

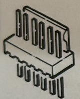

B4

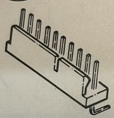

B5

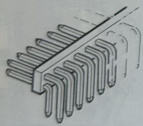

B6

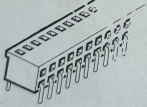

B7

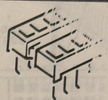

ALWAYS IDENTIFY AN I.C. SOCKET BY COUNTING ITS PINS.
NOTE: THE STYLE MAY BE SLIGHTLY DIFFERENT THAN SHOWN.

B8

ALWAYS IDENTIFY AN I.C. BY THE PART NUMBER OR TYPE NUMBER
NOTE: THE STYLE MAY BE SLIGHTLY DIFFERENT THAN SHOWN.

C1

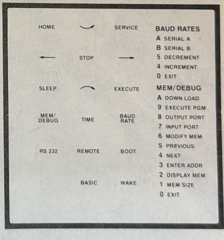

C3

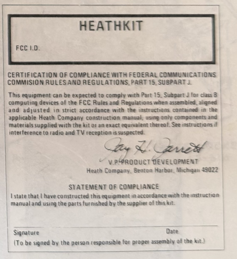

C2

Copyright © 1985
Heath Company
All Rights Reserved
Printed in the United States of America

KEYBOARD CIRCUIT BOARD PARTS PICTORIAL

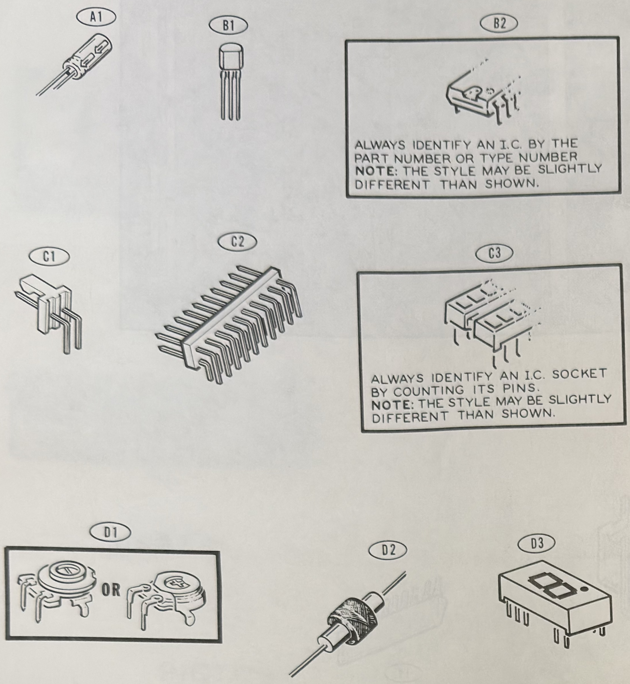

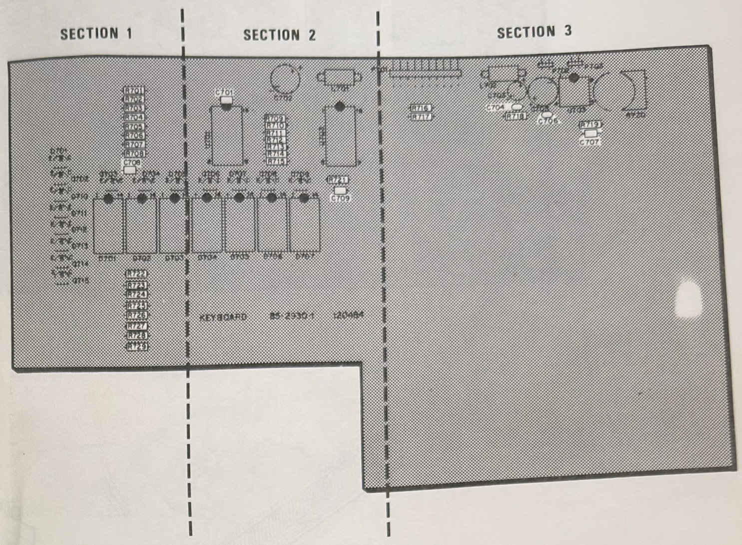

PICTORIAL 3-1

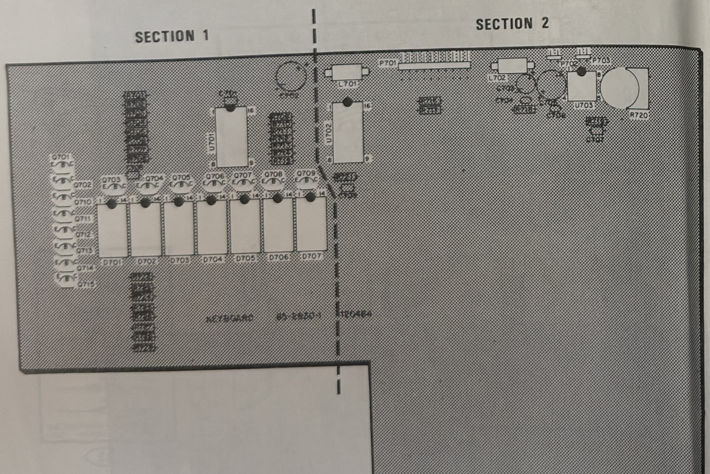

PICTORIAL 3-2

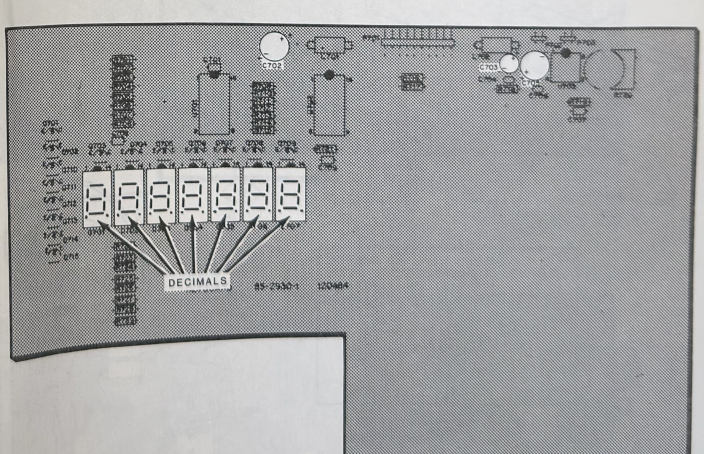

PICTORIAL 3-3

POWER SUPPLY CIRCUIT BOARD PARTS PICTORIAL

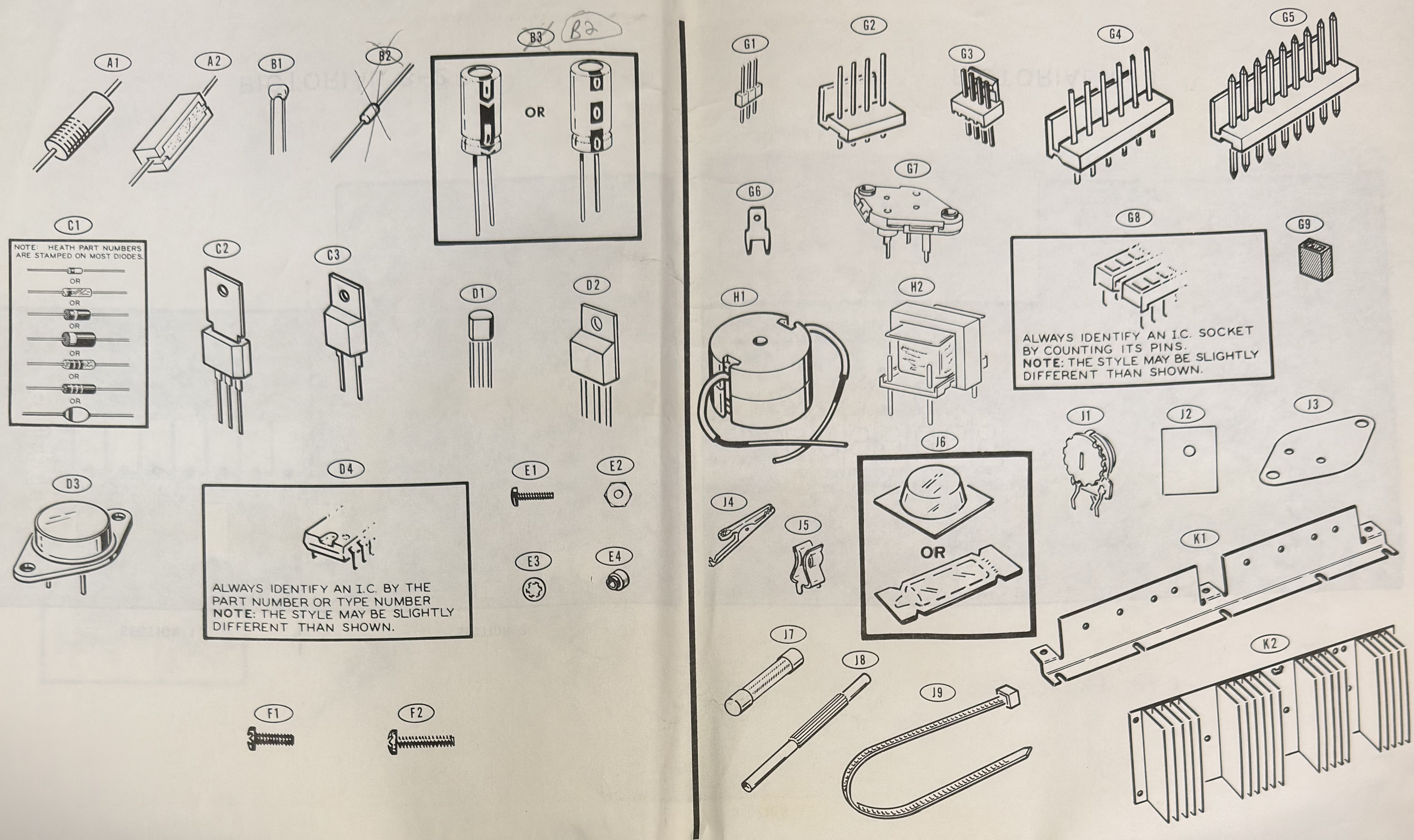

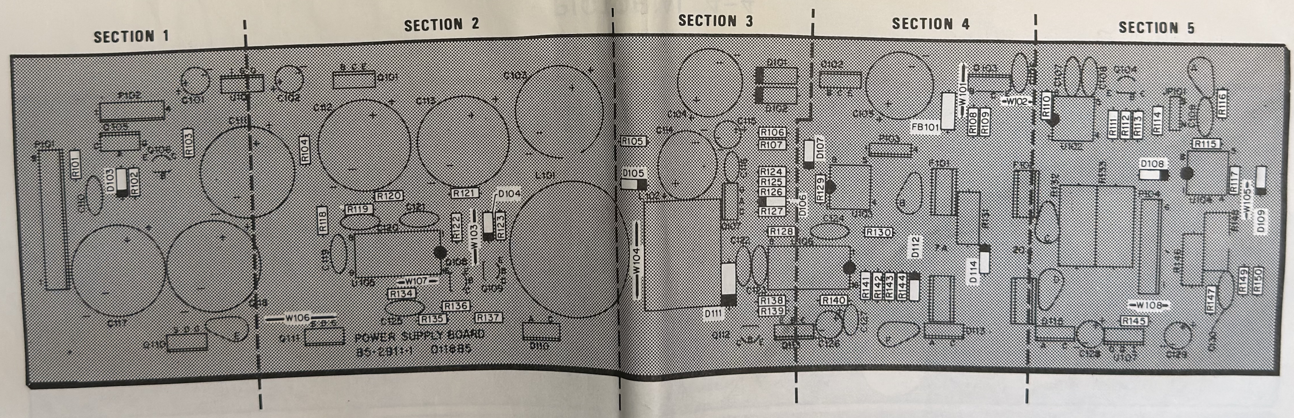

PICTORIAL 4-1

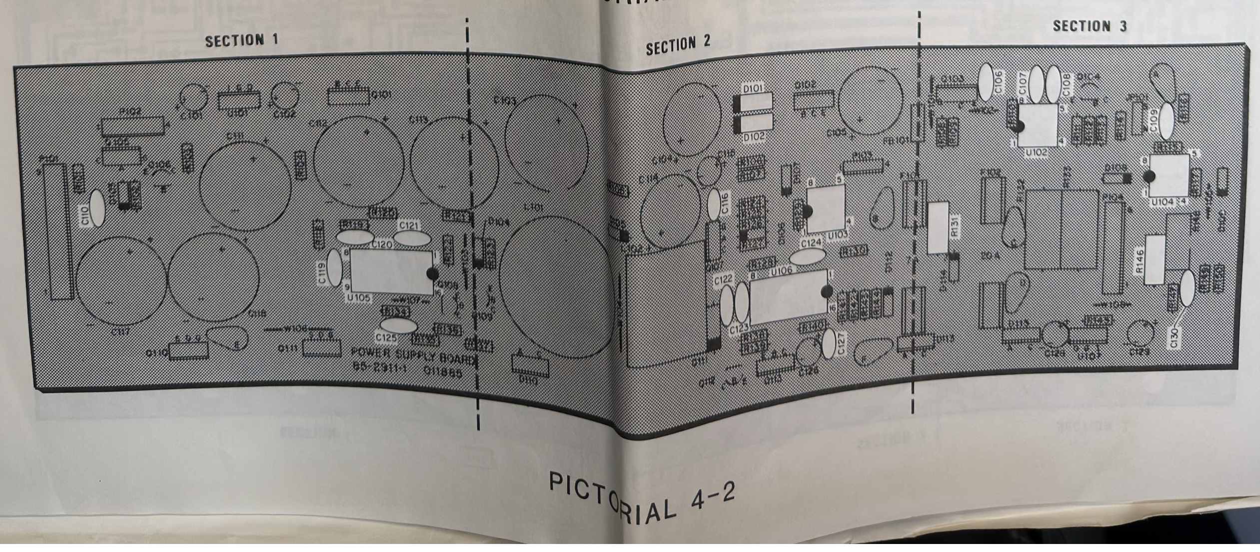

PICTORIAL 4-2

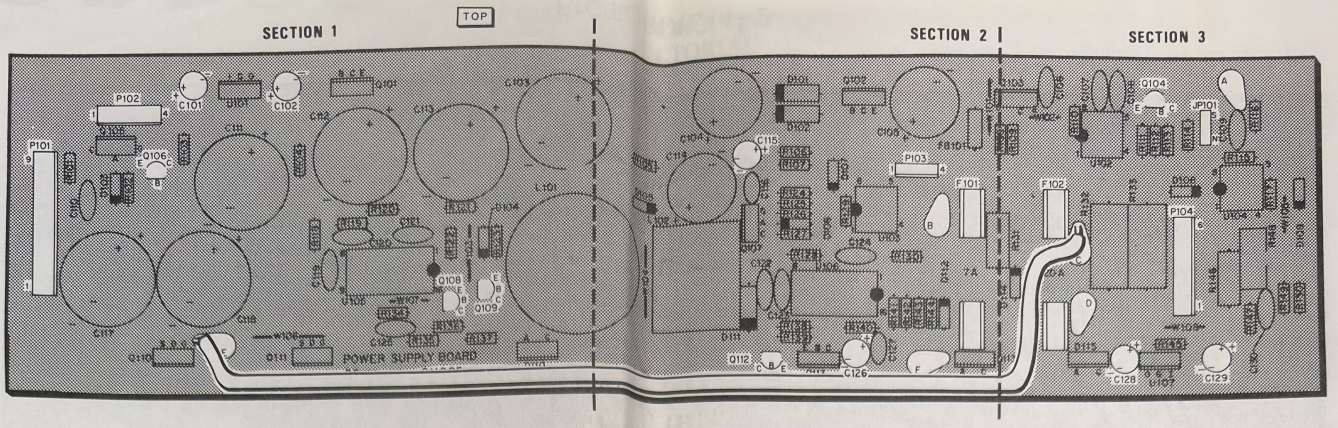

PICTORIAL 4-3

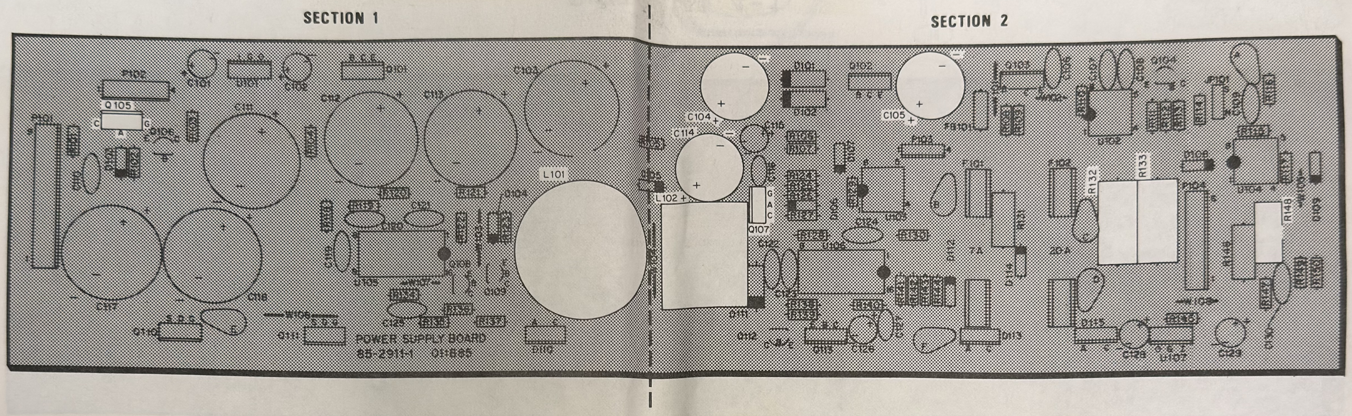

PICTORIAL 4-4

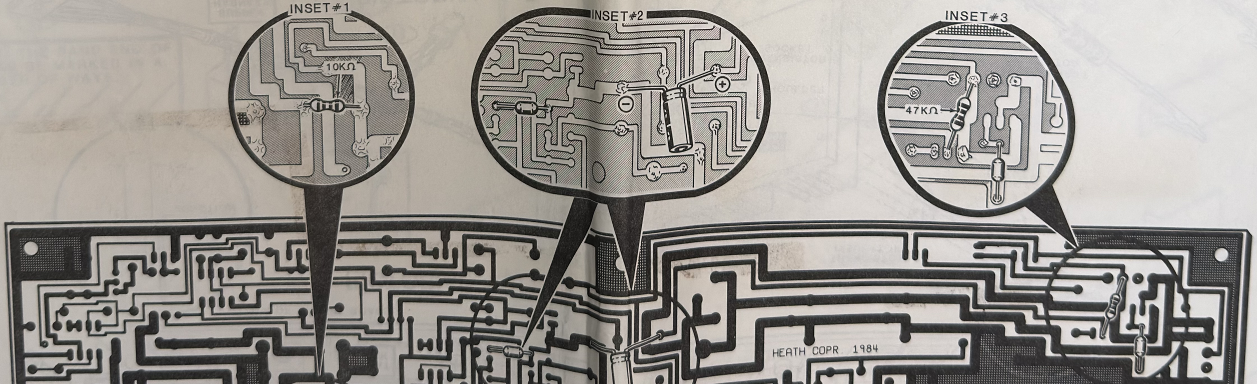

PICTORIAL 4-5

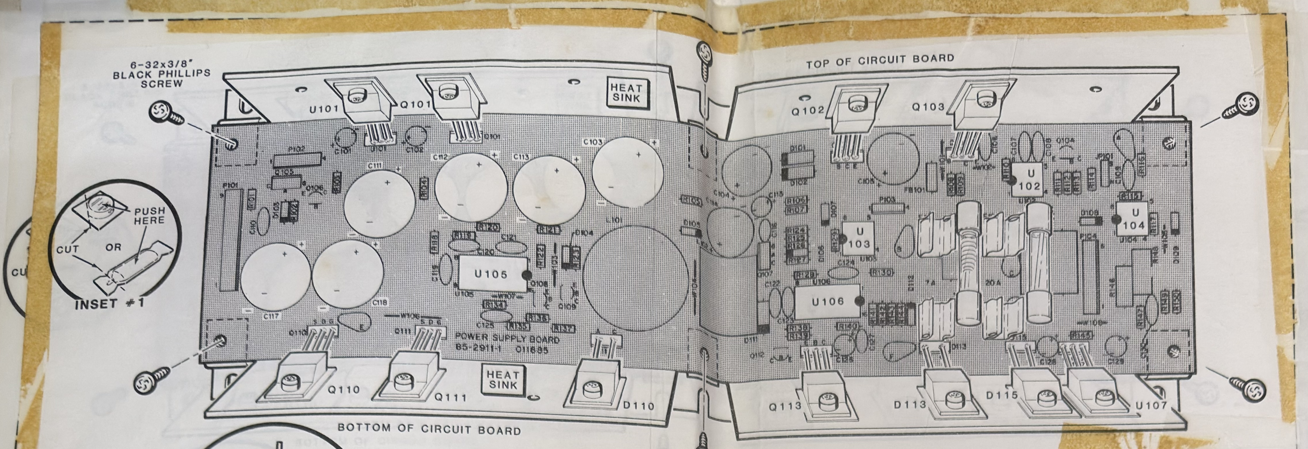

PICTORIAL 4-6

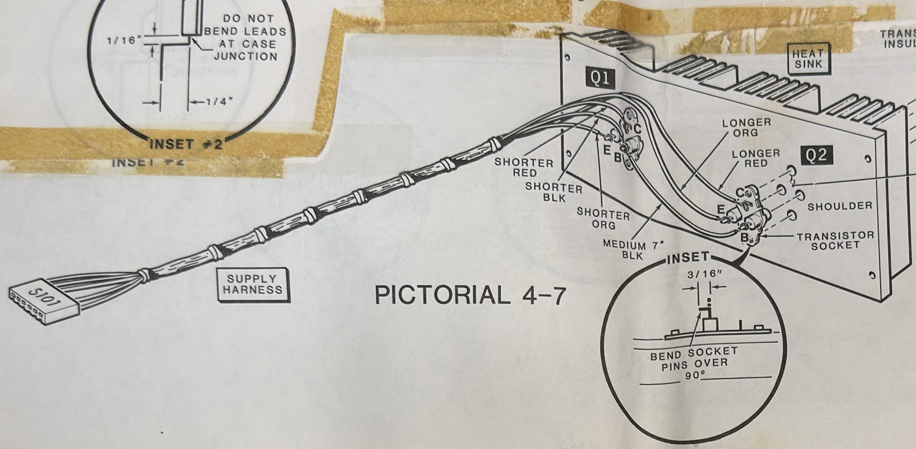

PICTORIAL 4-7

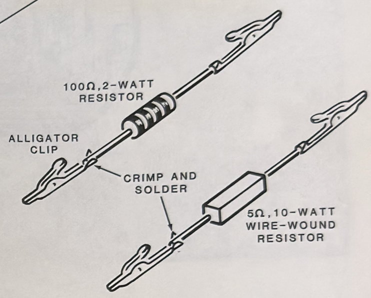

PICTORIAL 4-8

BATTERY CHARGER PARTS PICTORIAL

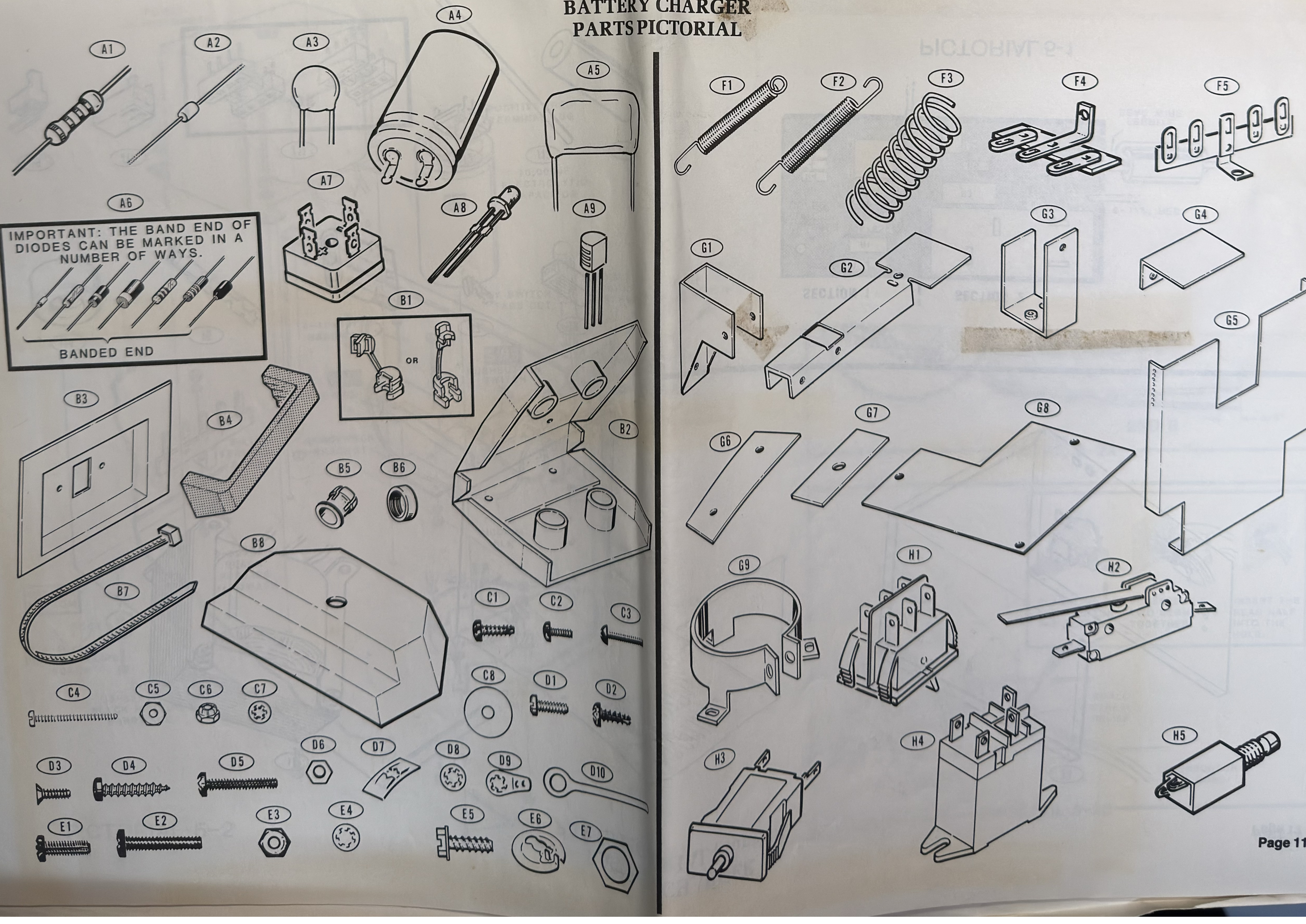

BATTERY CHARGER PARTS PICTORIAL (Cont'd.)

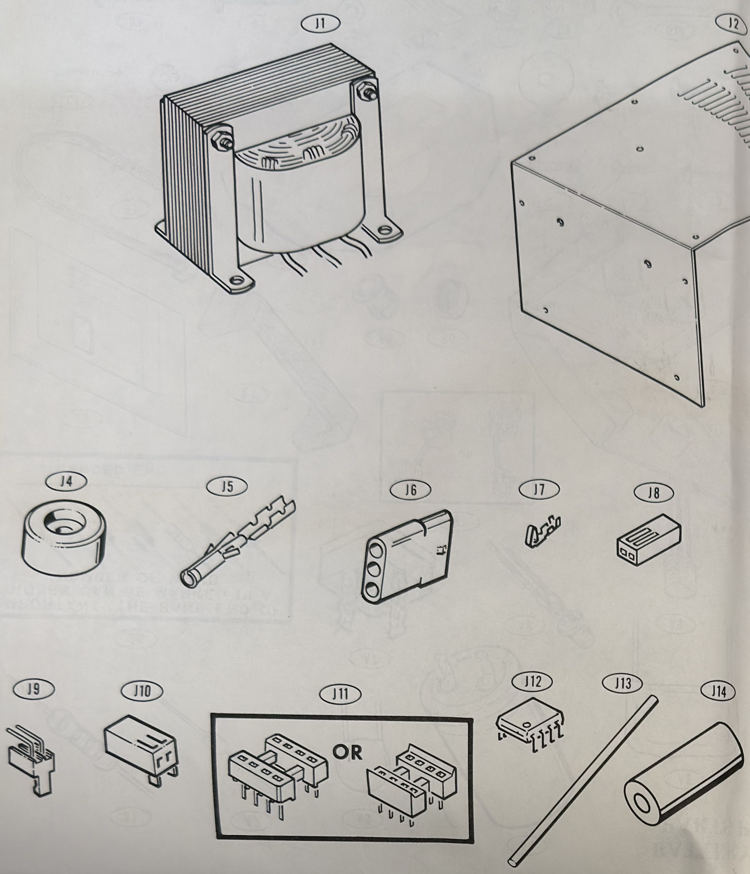

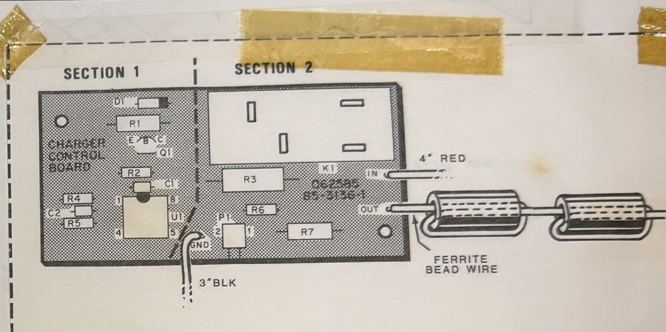

PICTORIAL 5-1

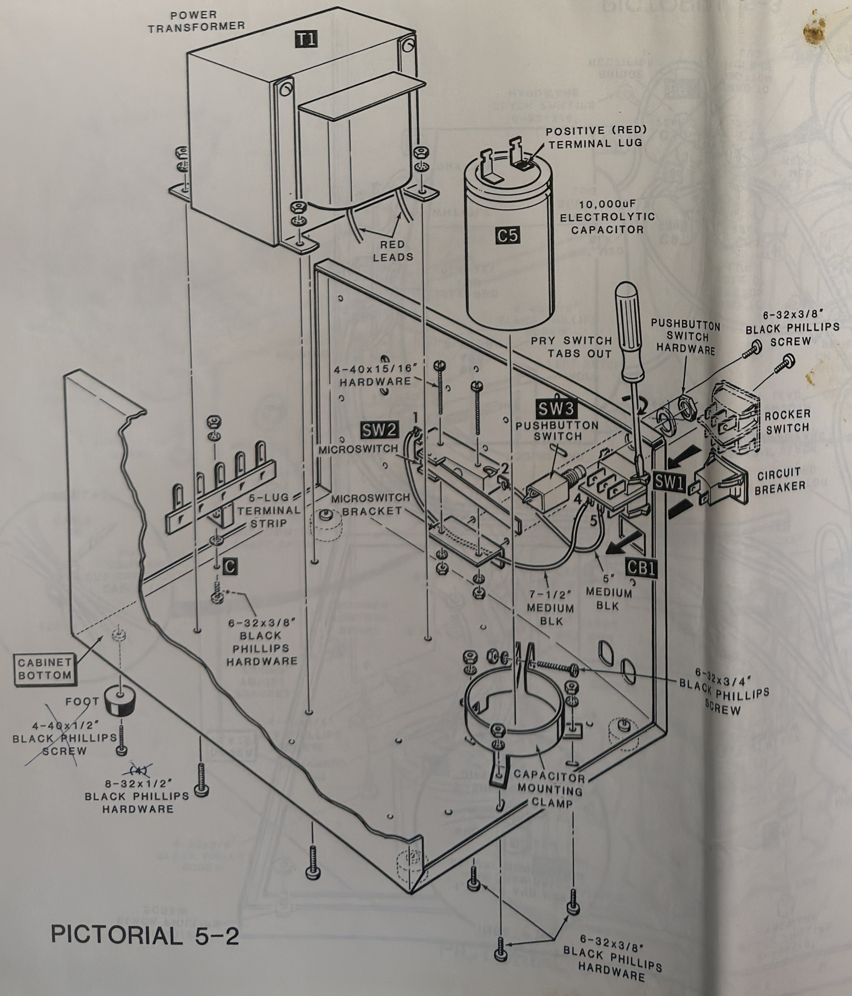

PICTORIAL 5-2

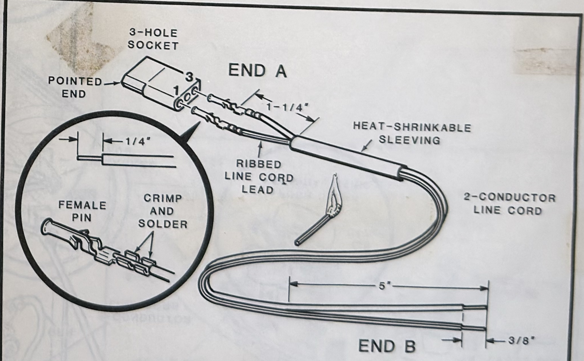

DETAIL 5-2A

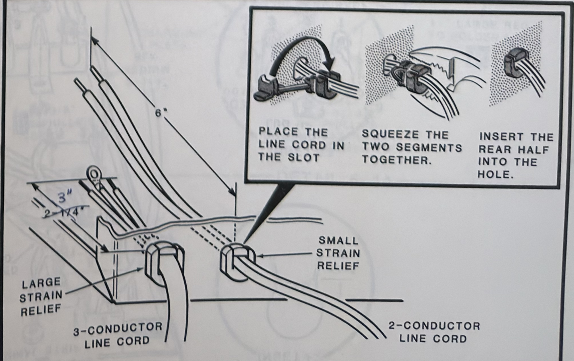

DETAIL 5-2B

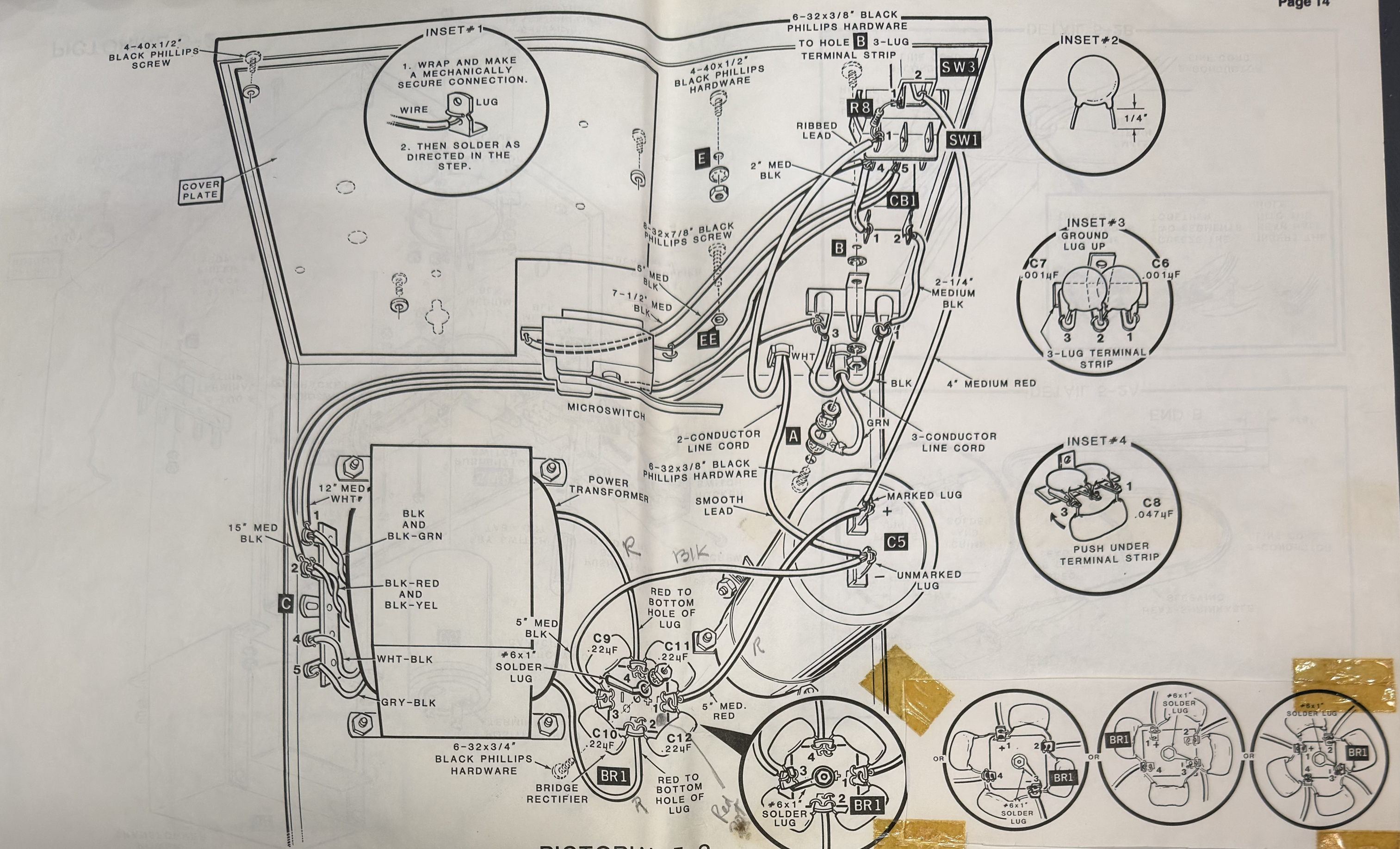

PICTORIAL 5-3

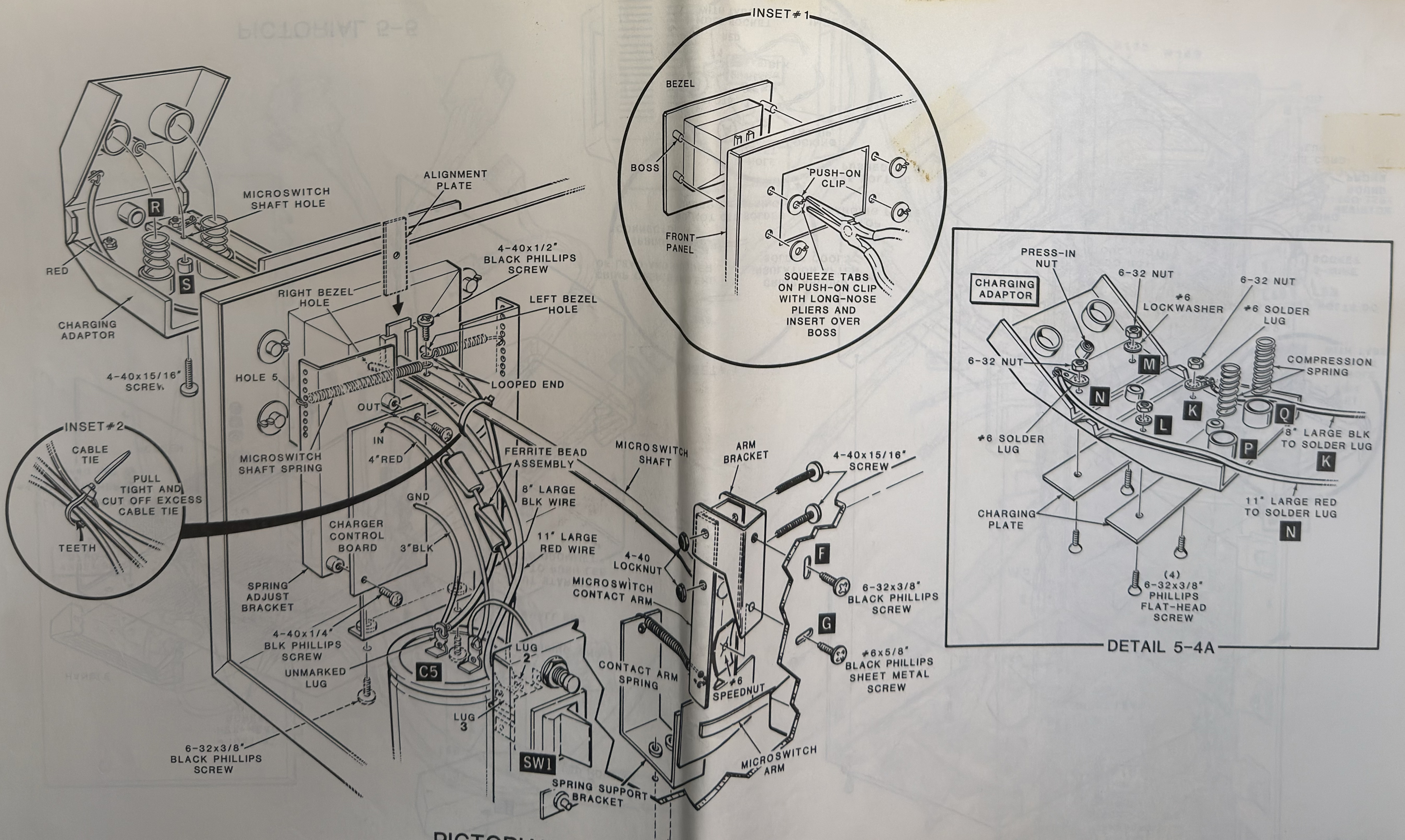

PICTORIAL 5-4

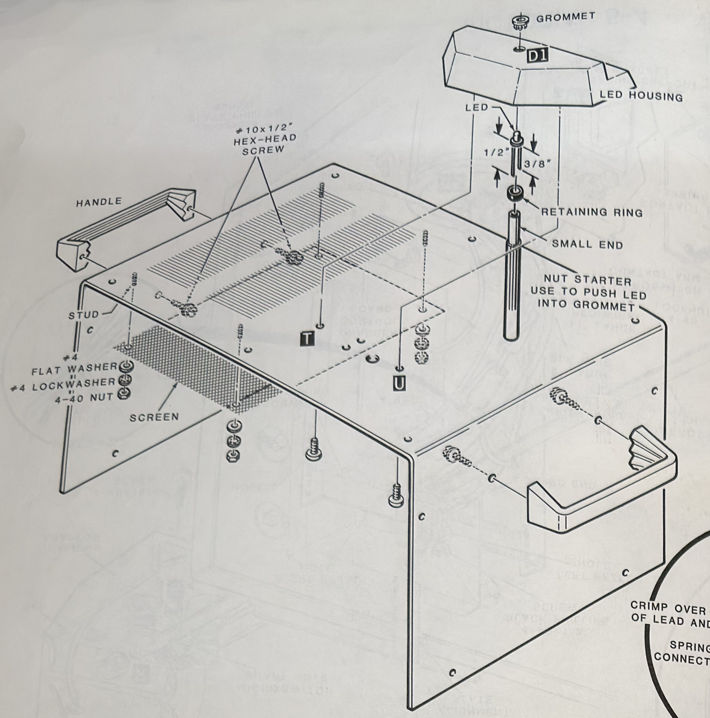

PICTORIAL 5-5

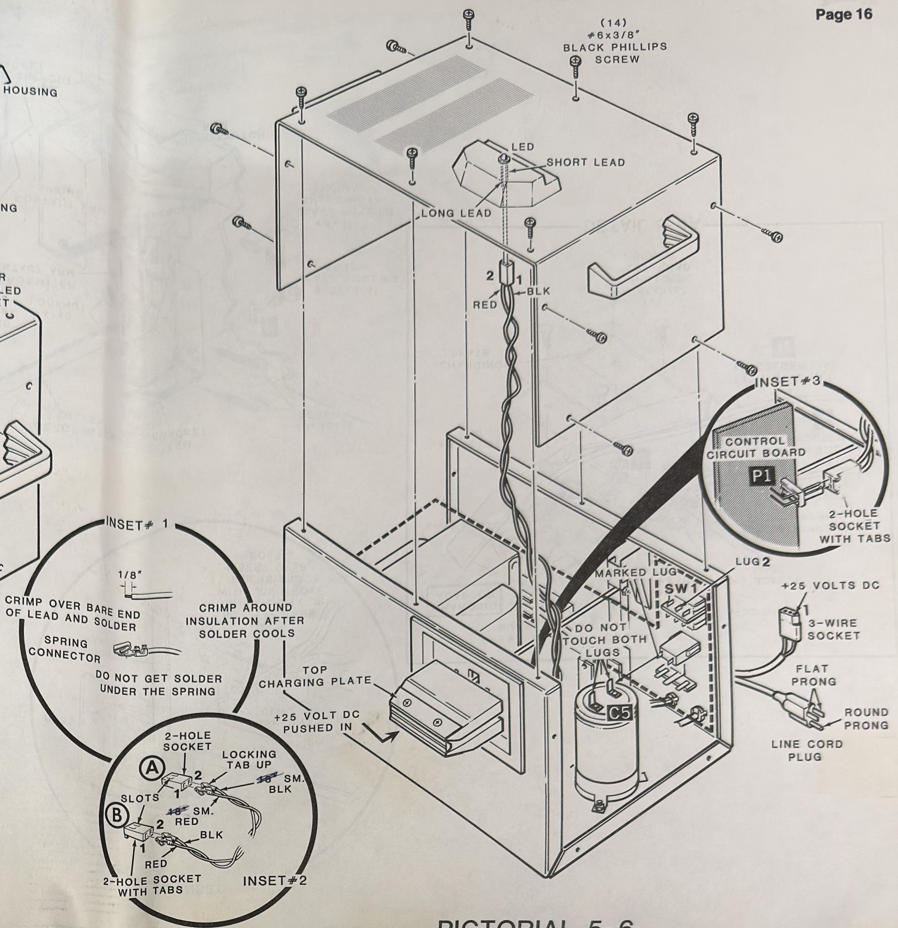

PICTORIAL 5-6

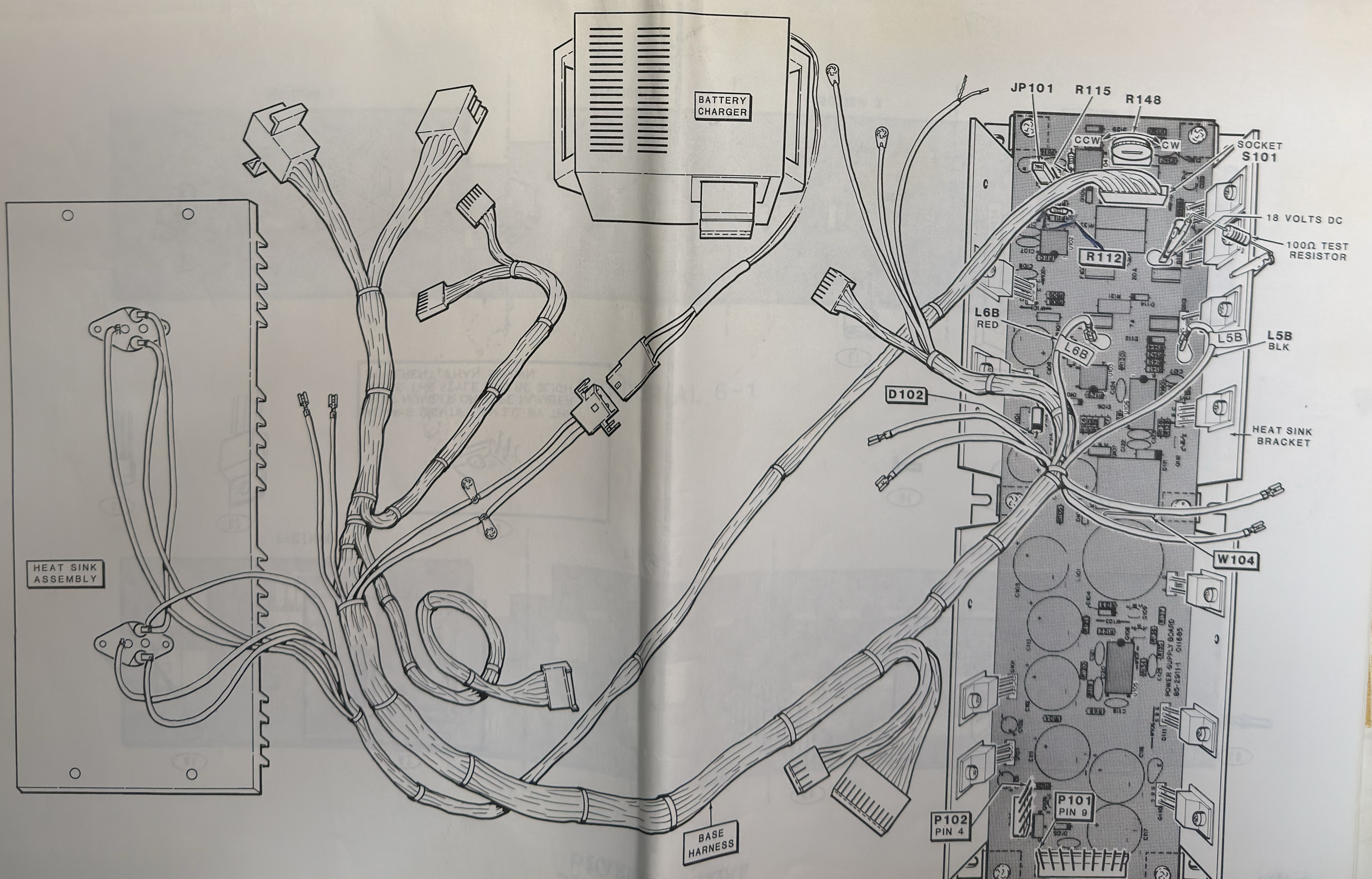

PICTORIAL 5-7

STATUS CIRCUIT BOARD PARTS PICTORIAL

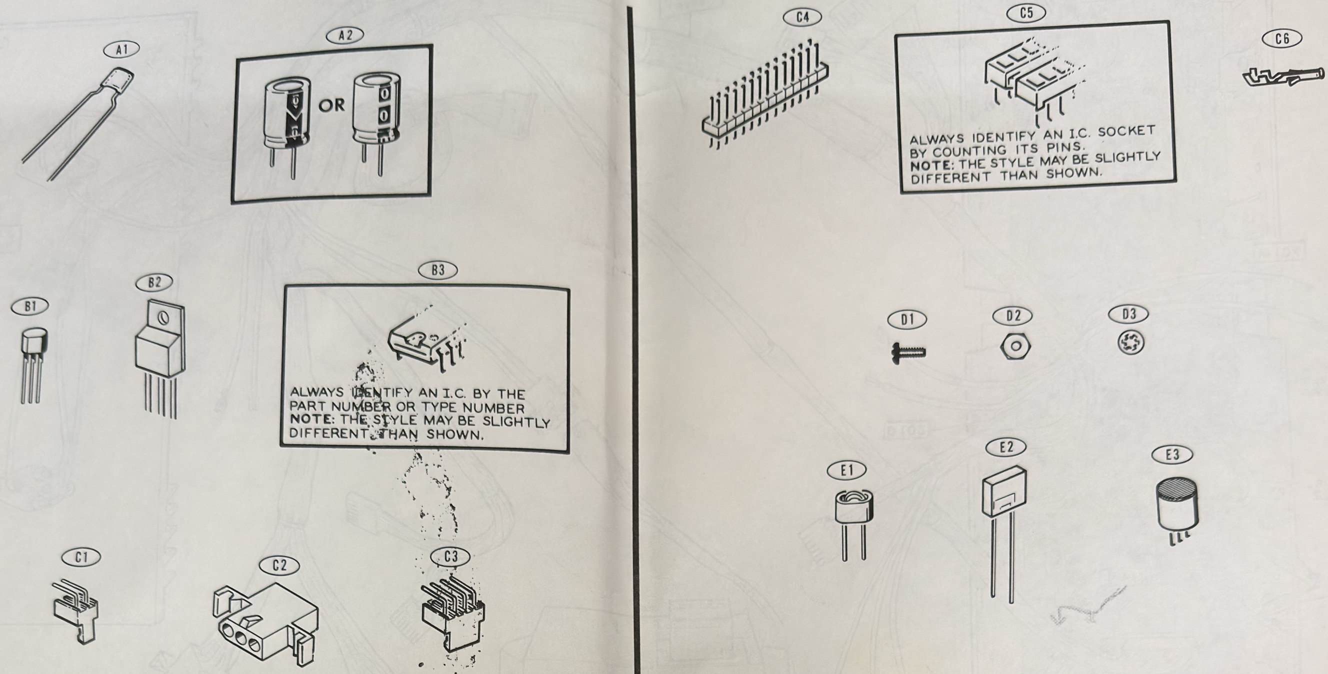

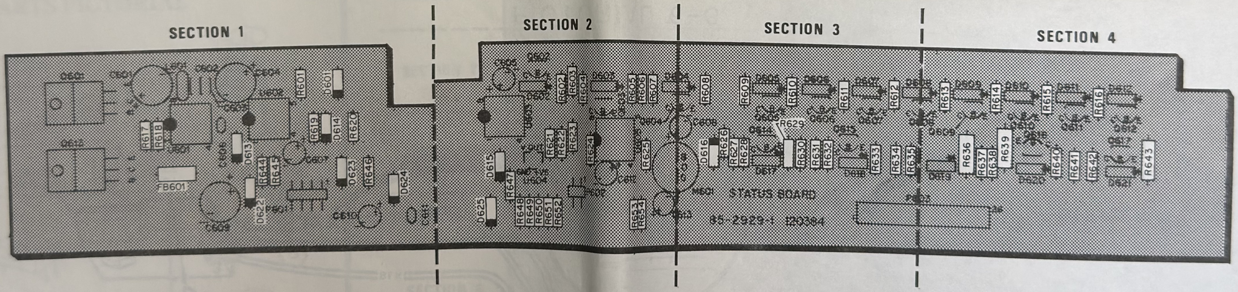

PICTORIAL 6-1

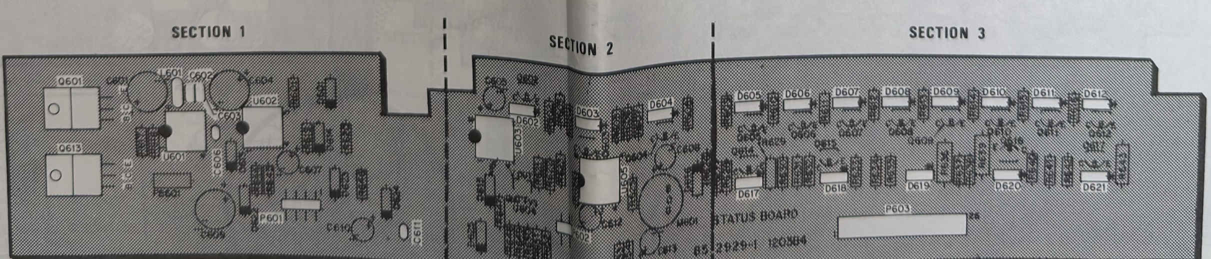

PICTORIAL 6-2

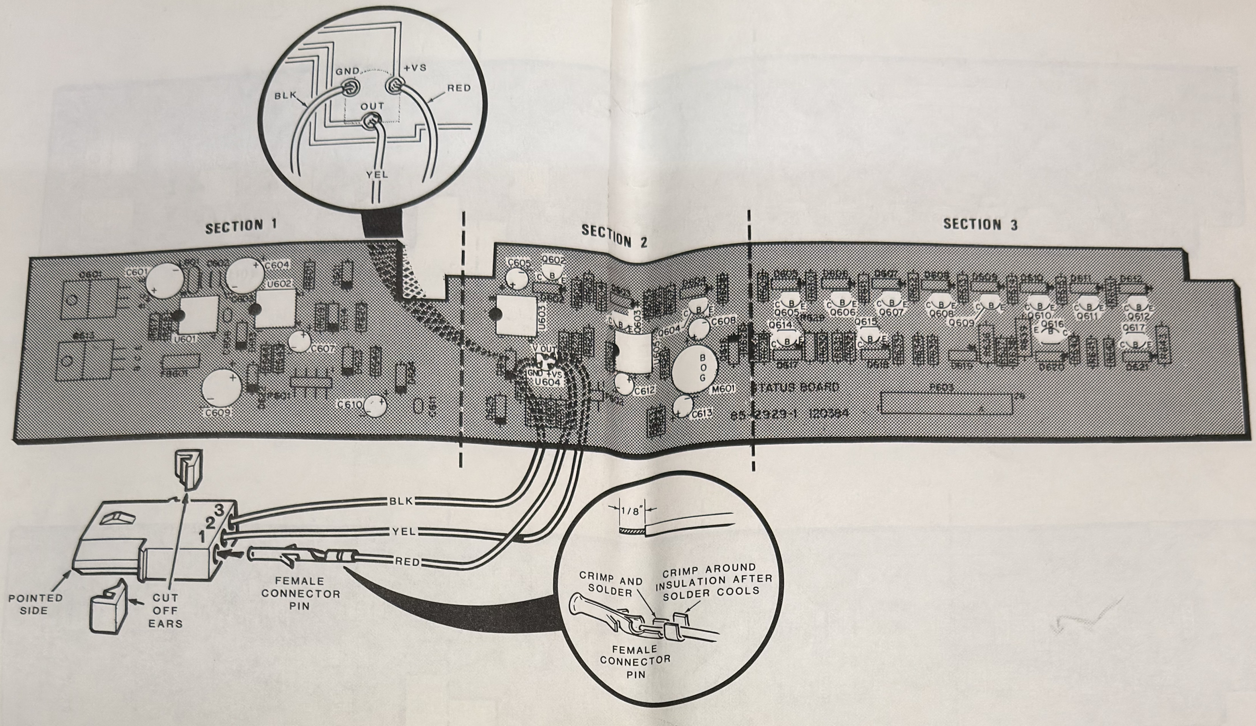

PICTORIAL 6-3

MOTOR CONTROLLER CIRCUIT BOARD PARTS PICTORIAL

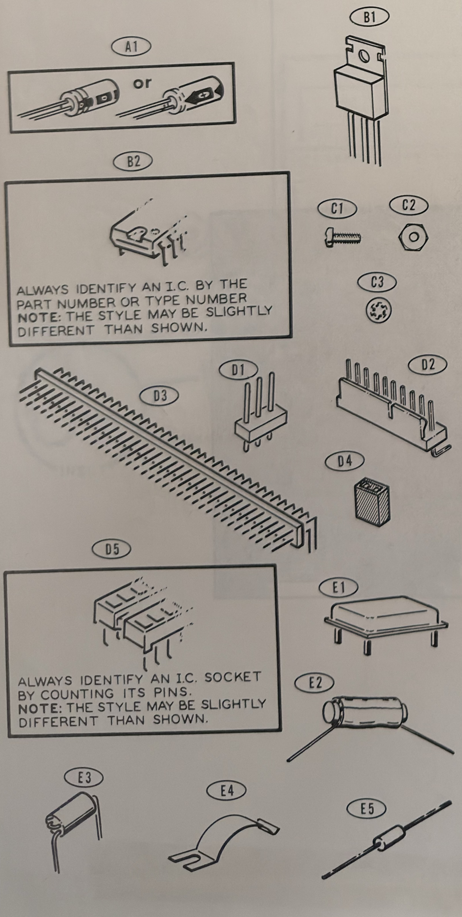

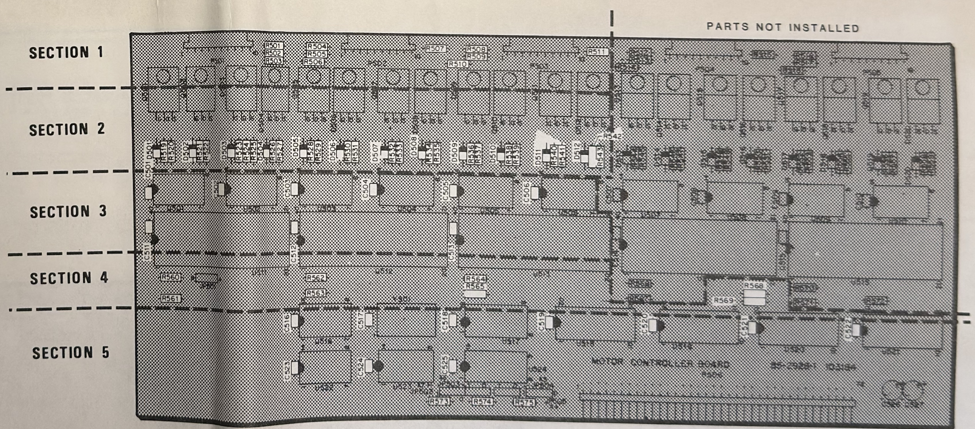

PICTORIAL 7-1

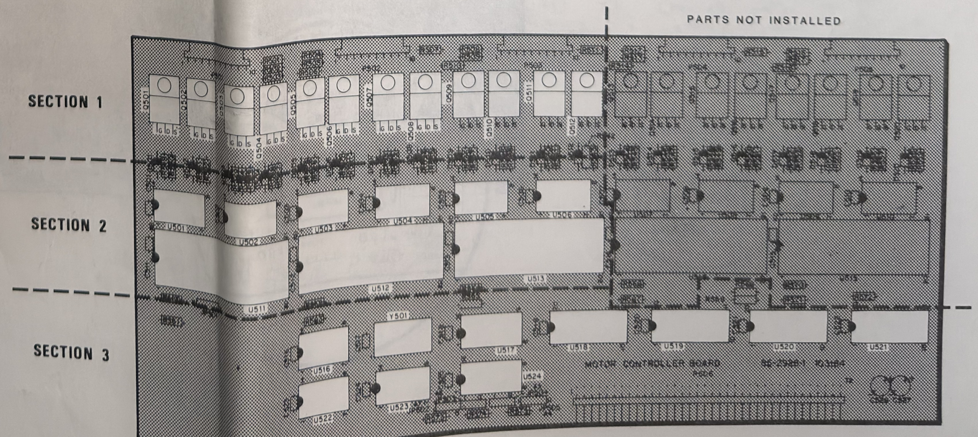

PICTORIAL 7-2

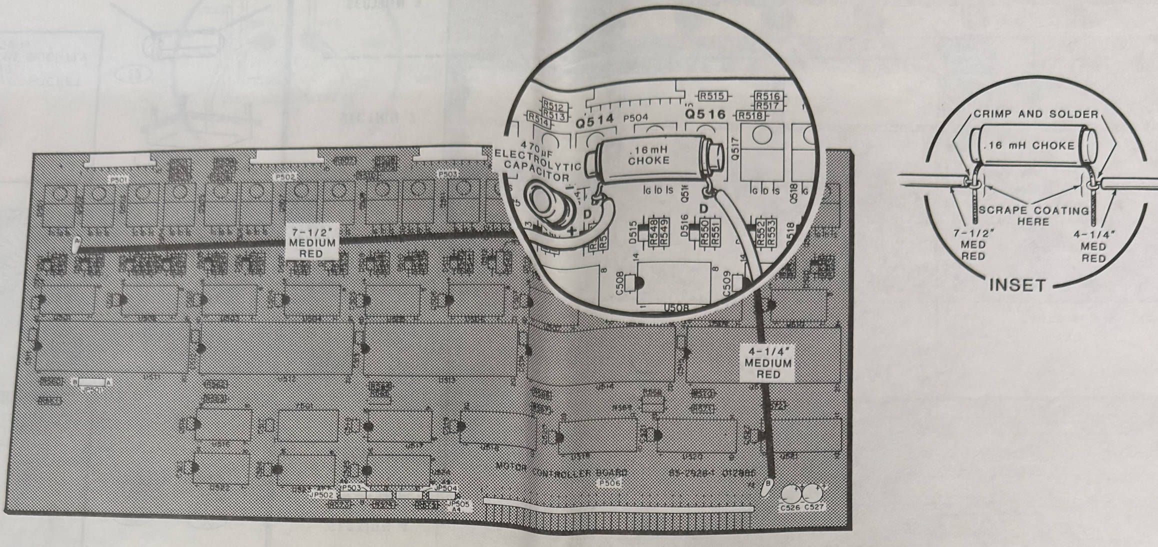

PICTORIAL 7-3

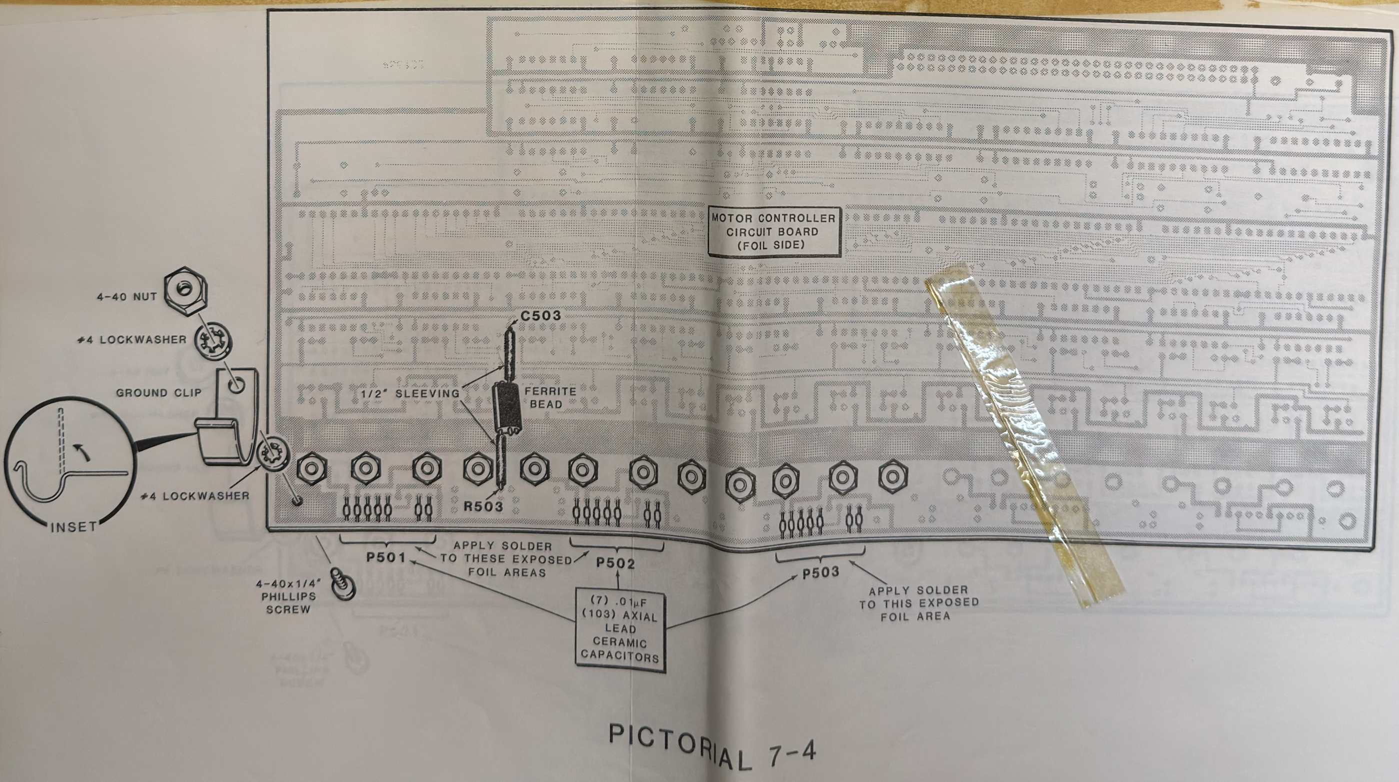

PICTORIAL 7-4

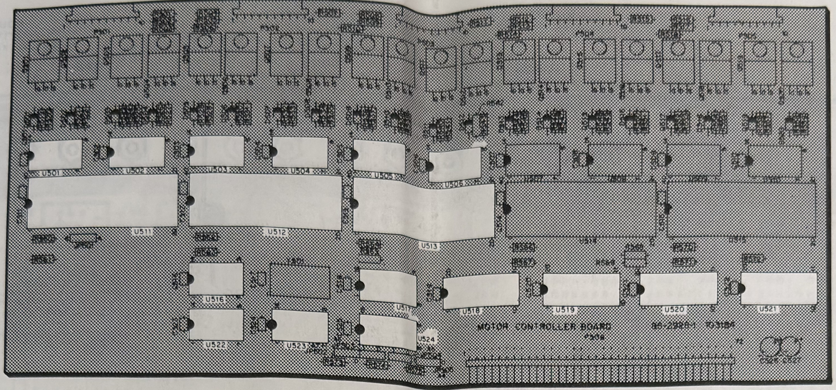

PICTORIAL 7-5

TORSO PARTS PICTORIAL

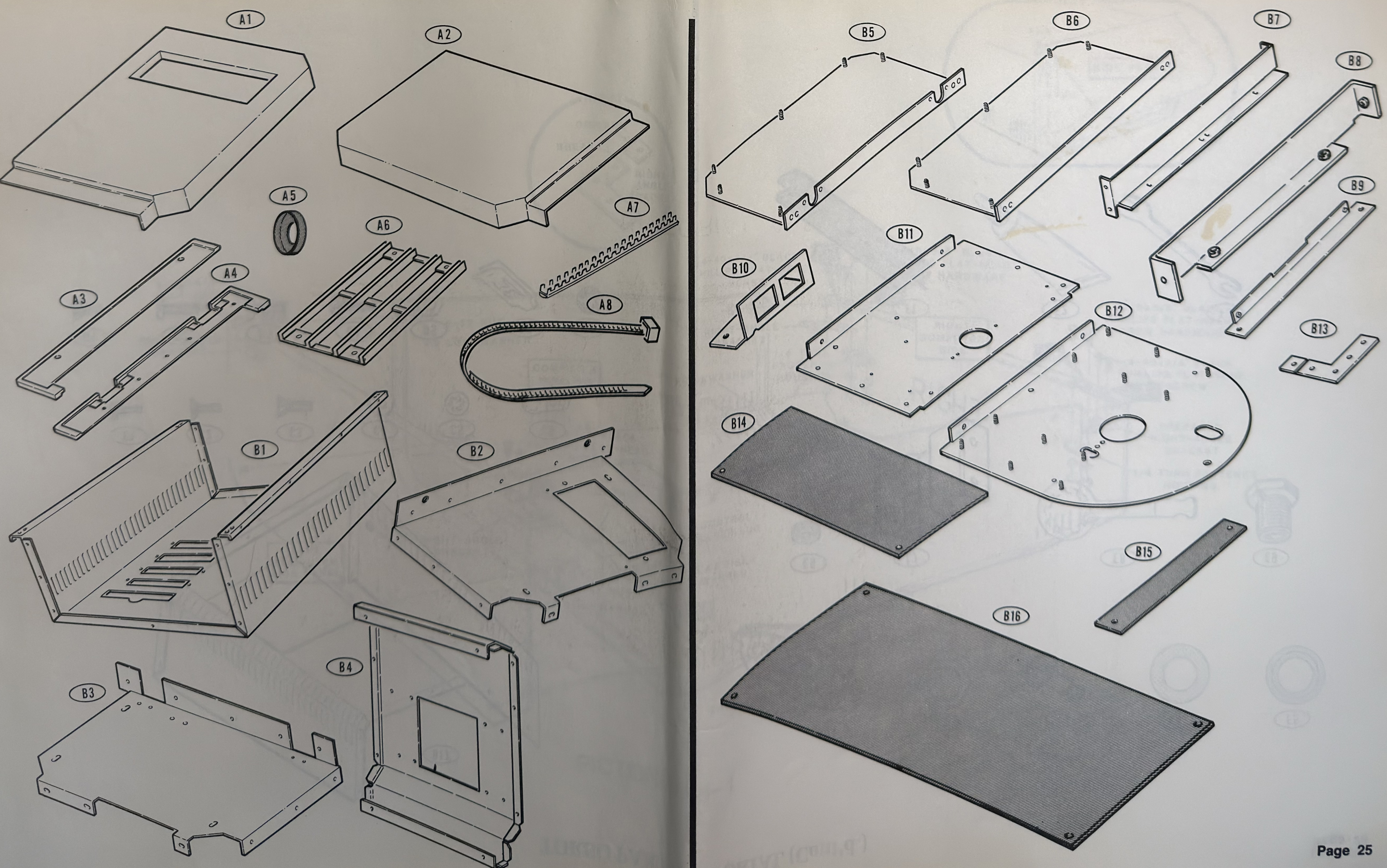

TORSO PARTS PICTORIAL (Cont'd.)

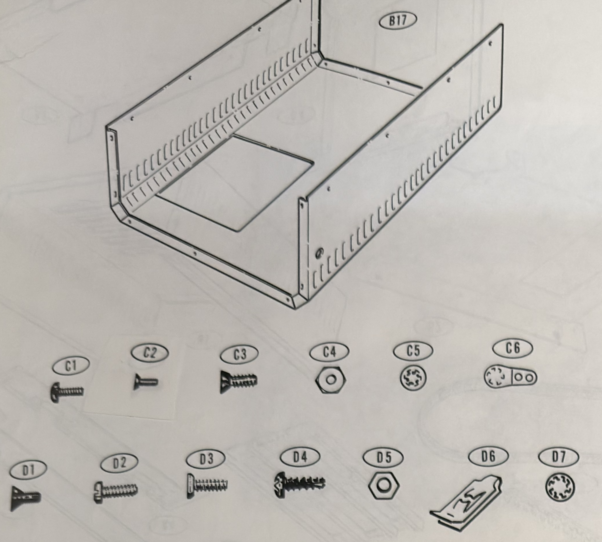

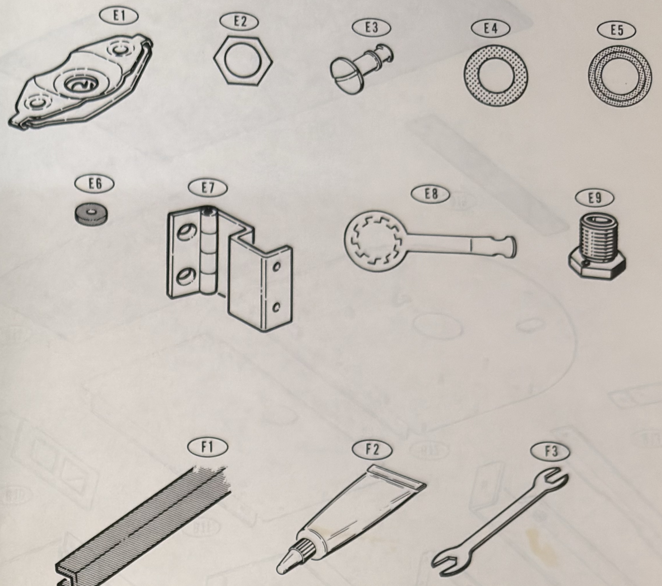

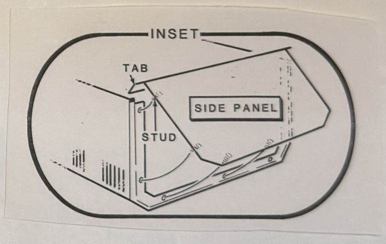

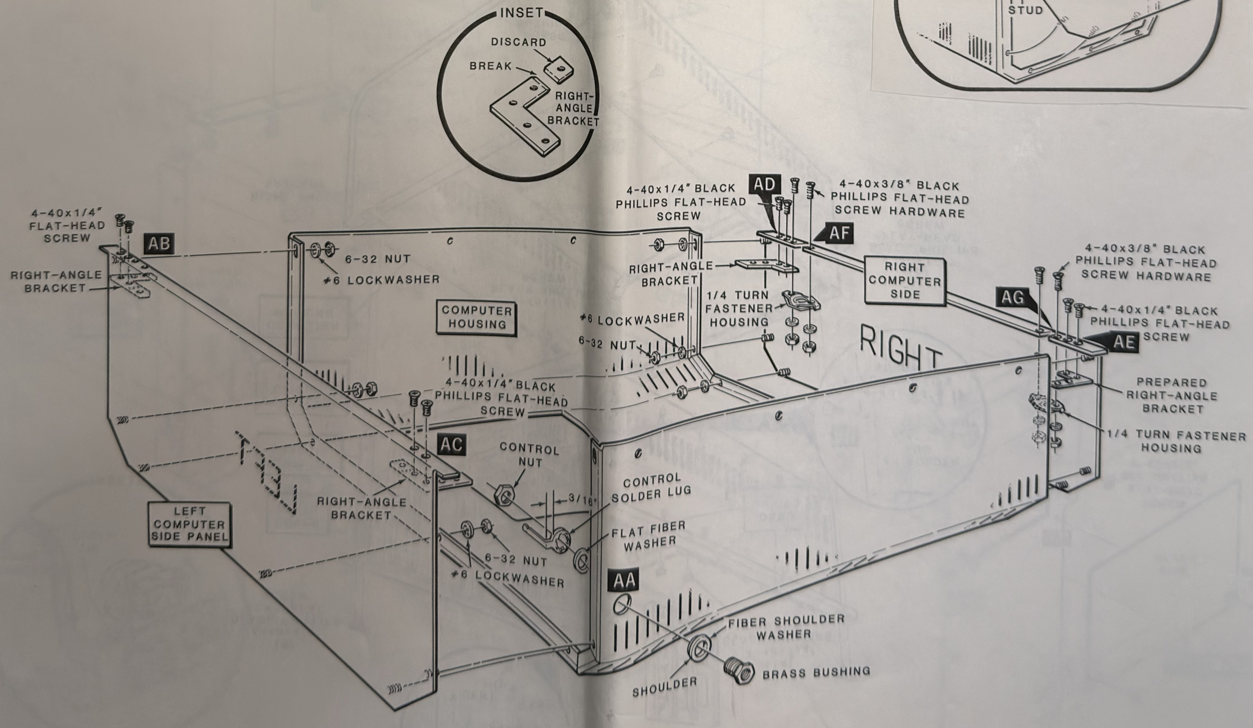

PICTORIAL 8-1

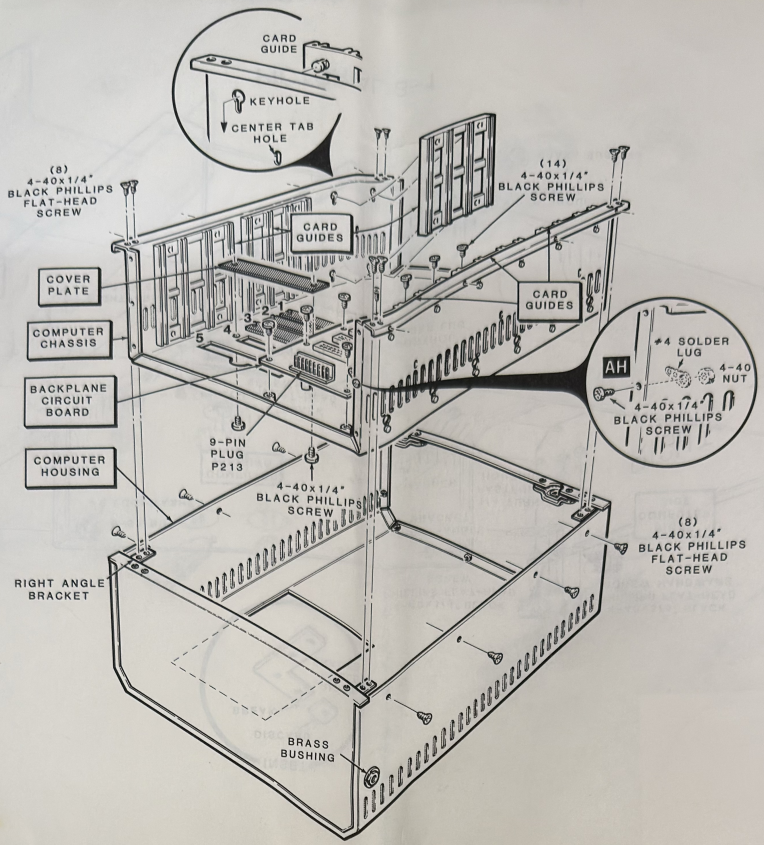

PICTORIAL 8-2

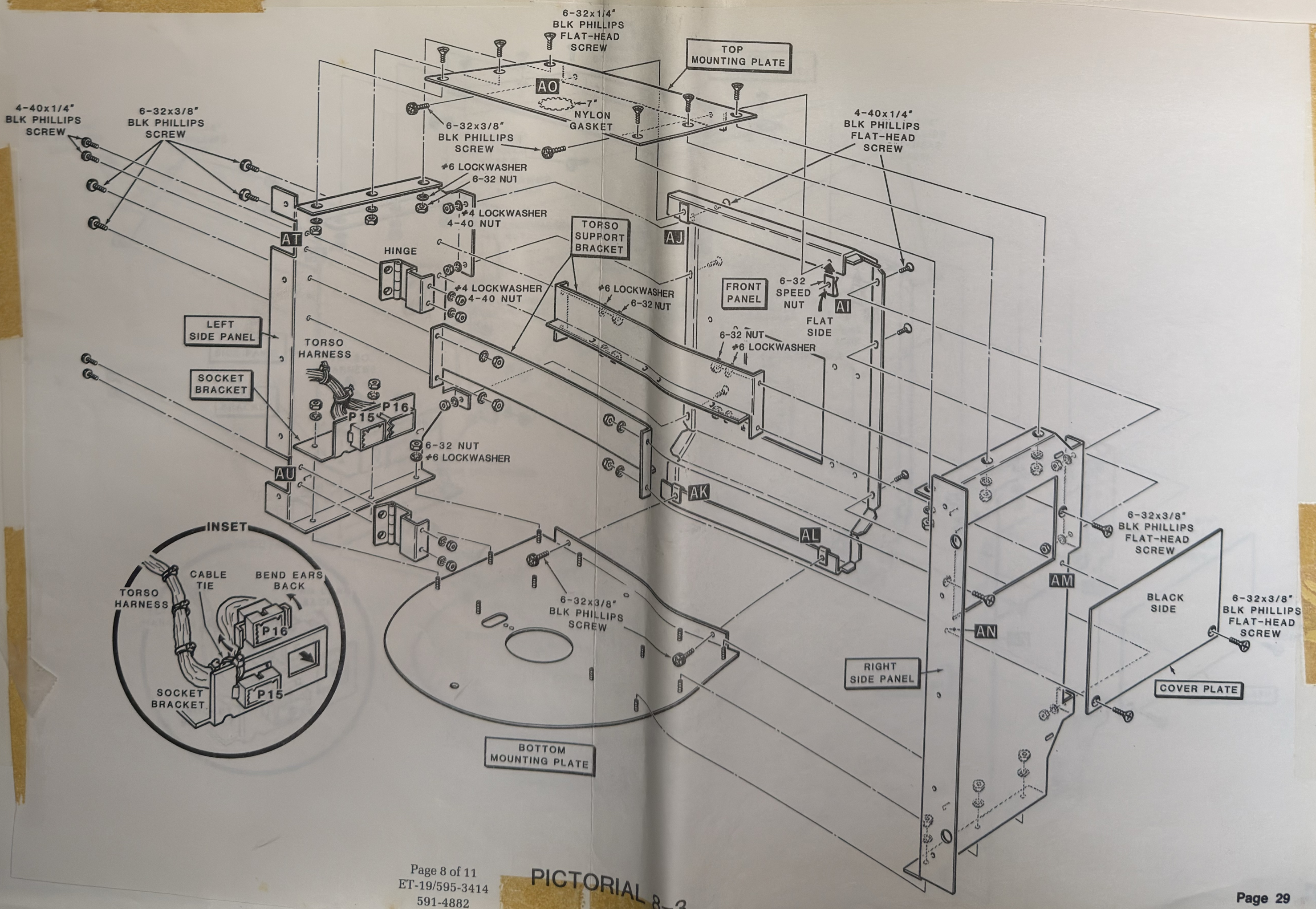

PICTORIAL 8-3

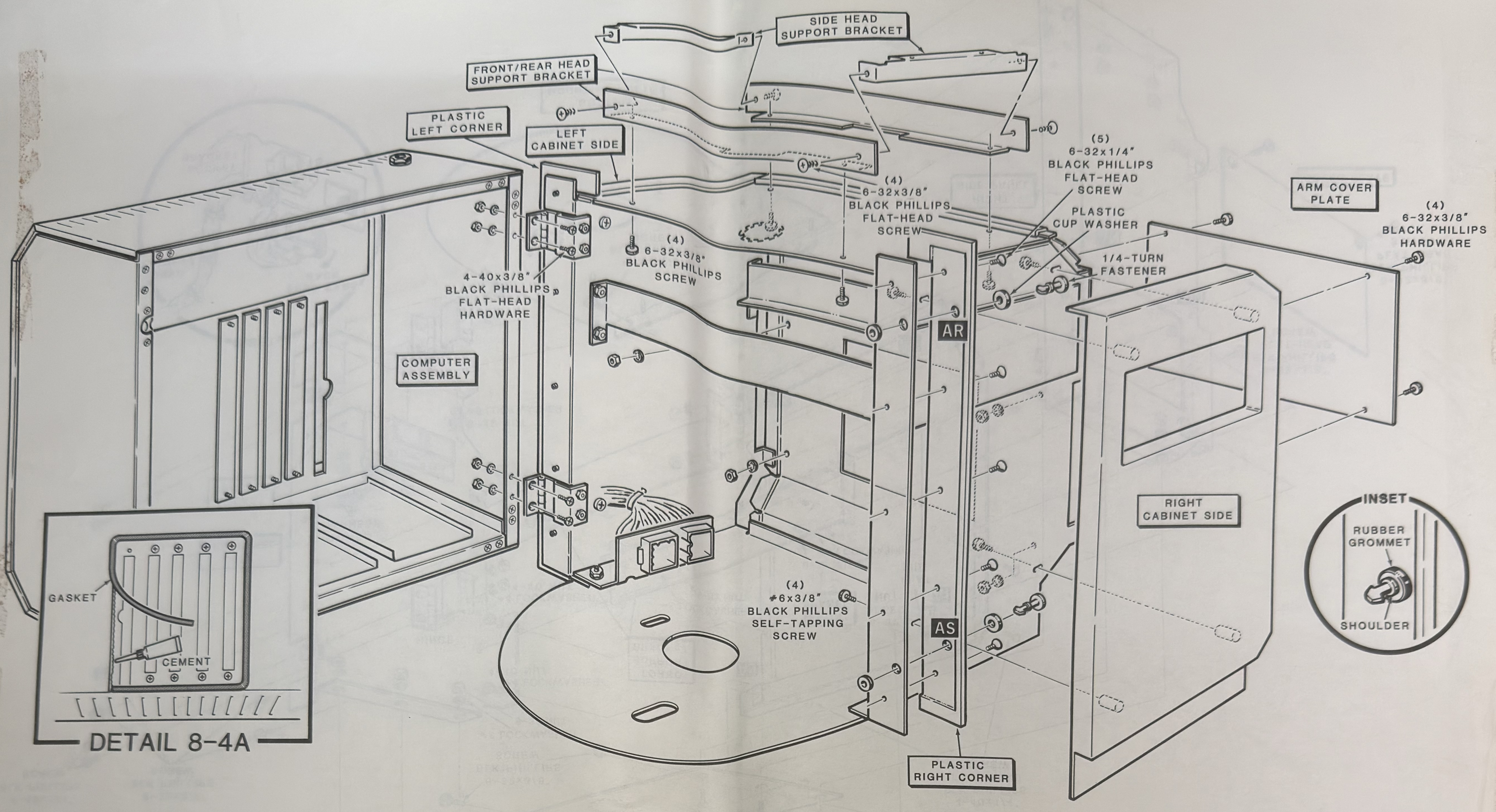

PICTORIAL 8-4

BASE PARTS PICTORIAL

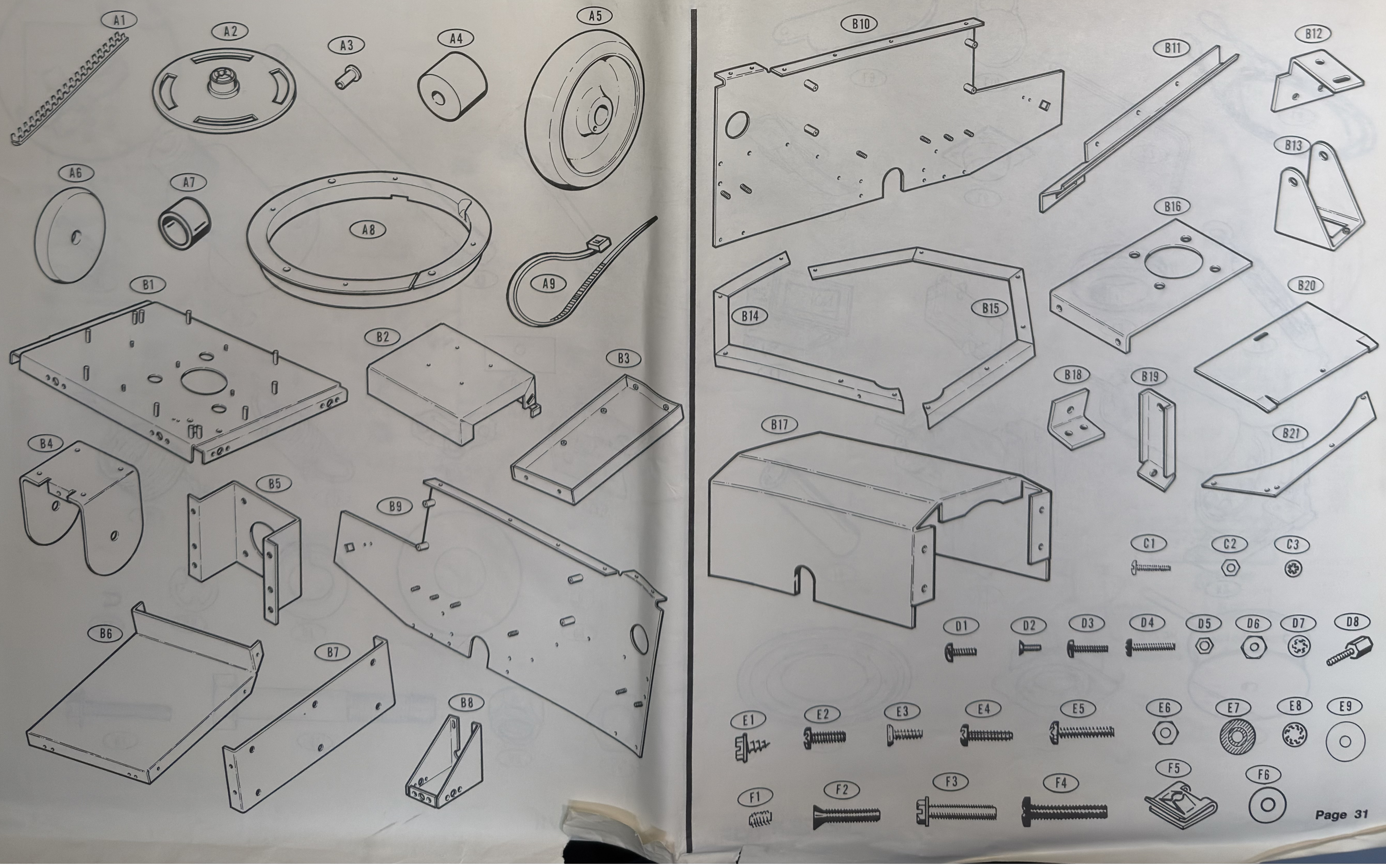

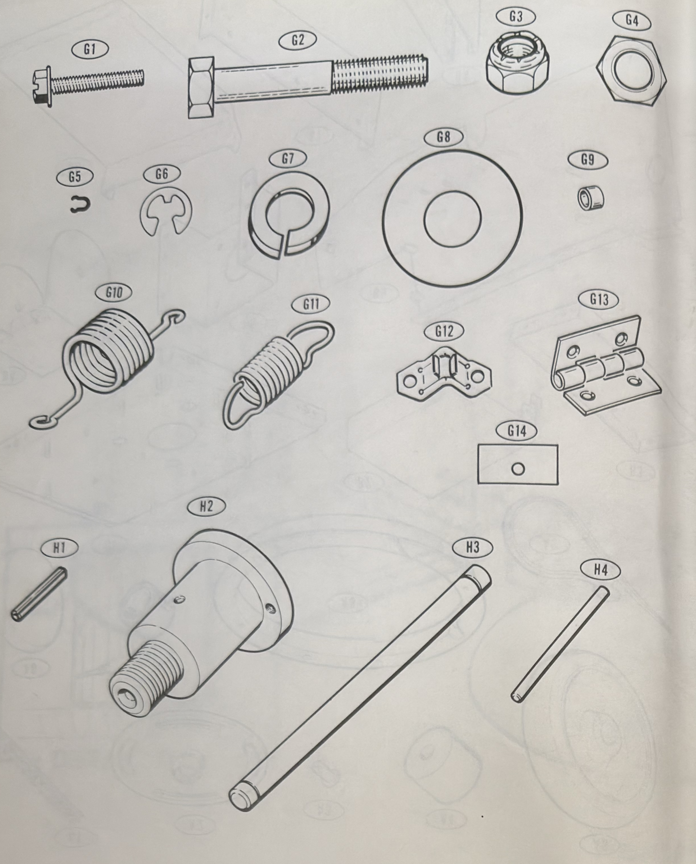

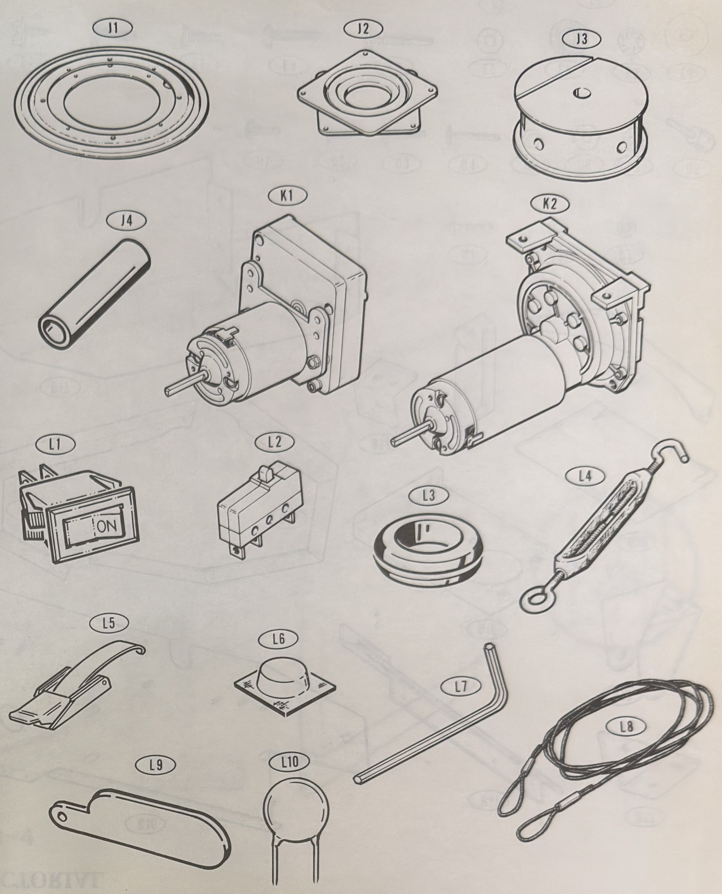

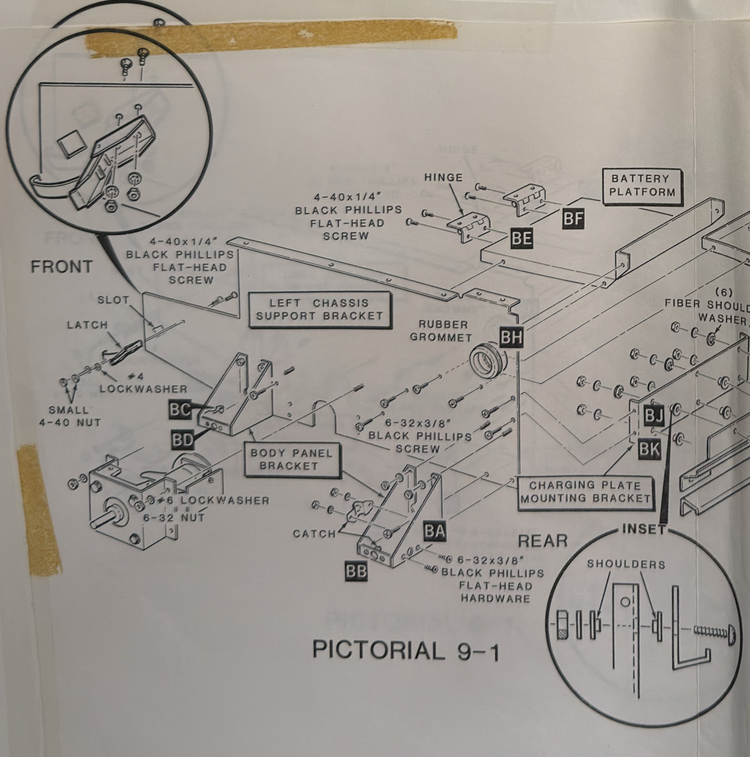

PICTORIAL 9-1

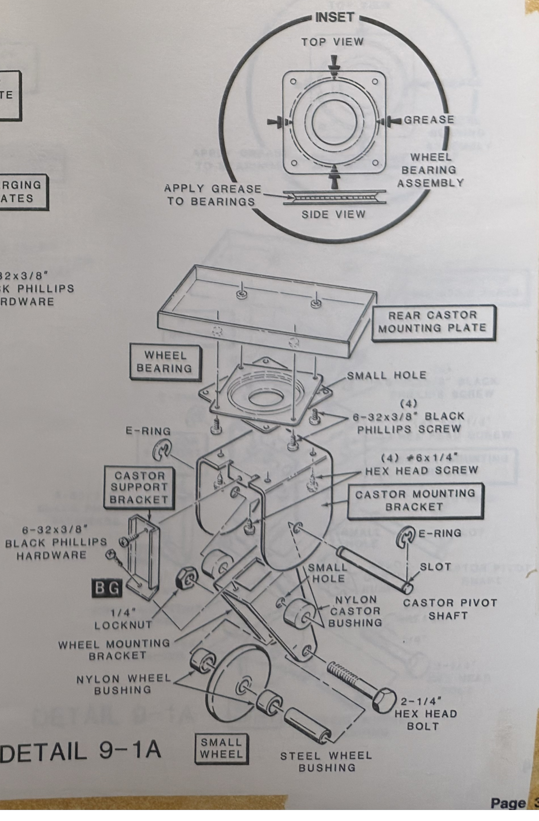

DETAIL 9-1A

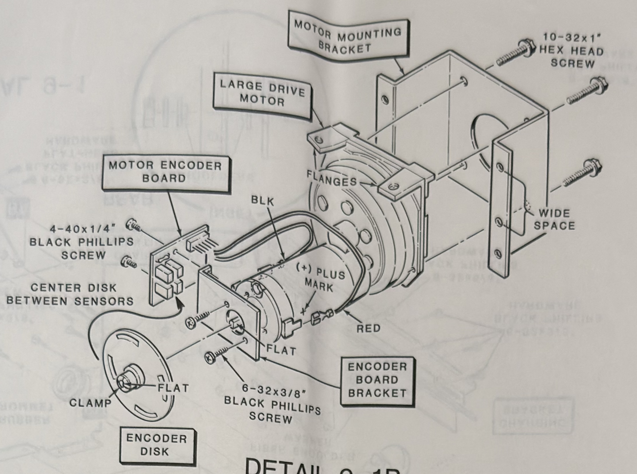

DETAIL 9-1B

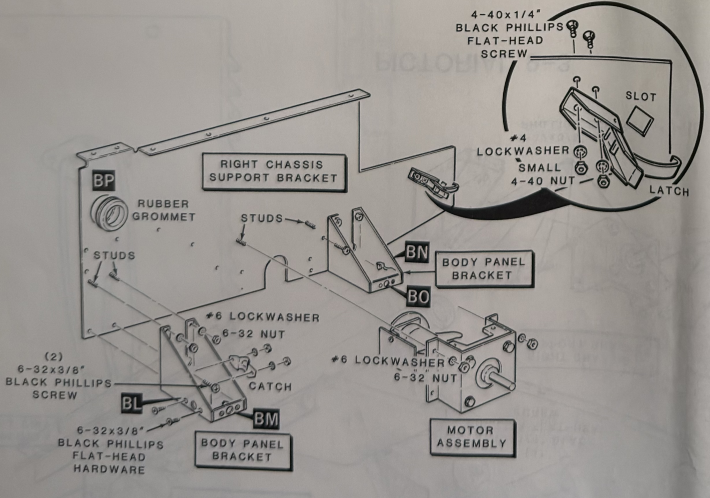

PICTORIAL 9-2

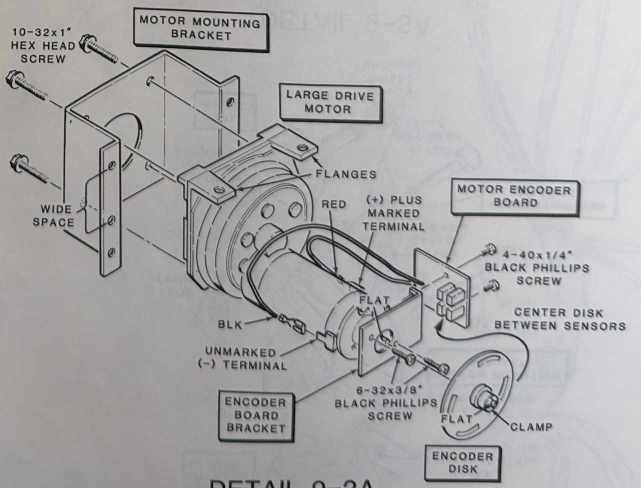

DETAIL 9-2A

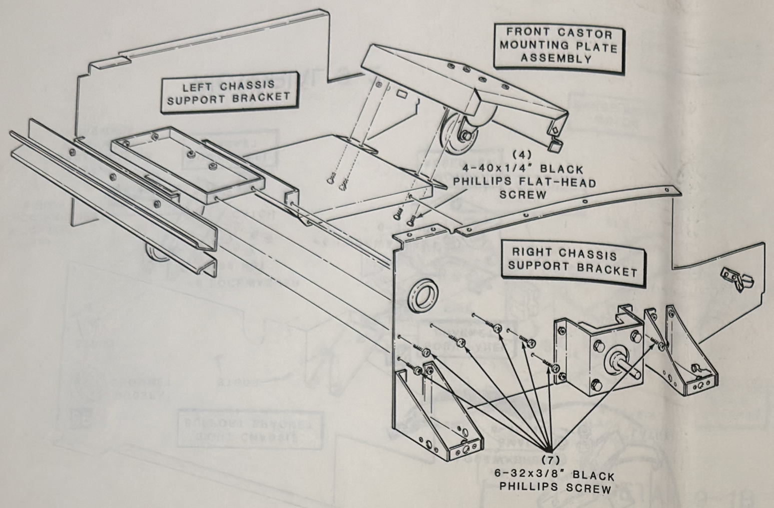

PICTORIAL 9-3

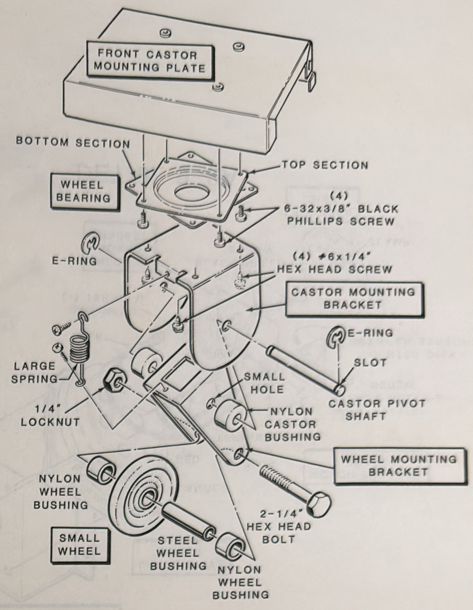

DETAIL 9-3A

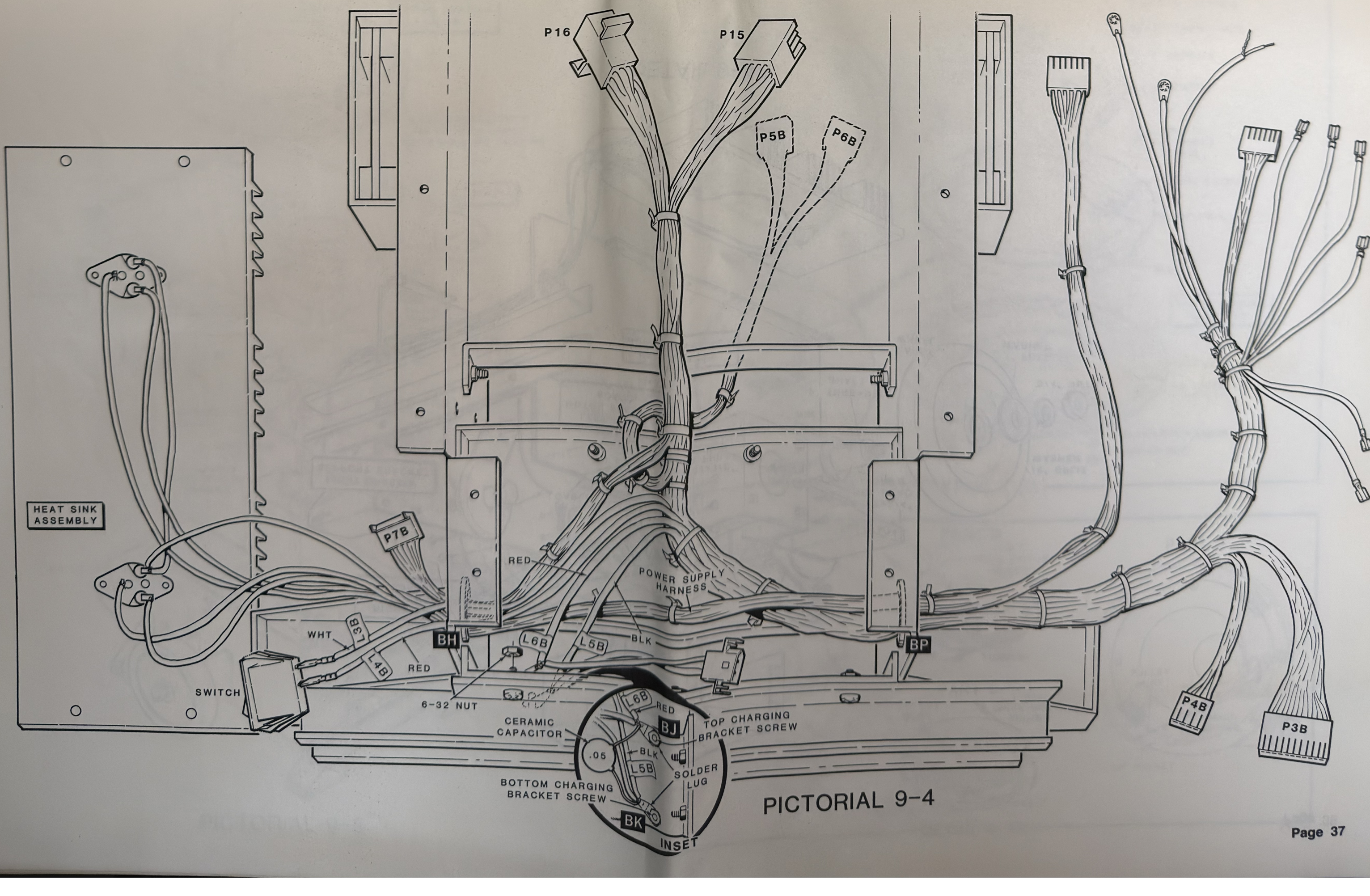

PICTORIAL 9-4

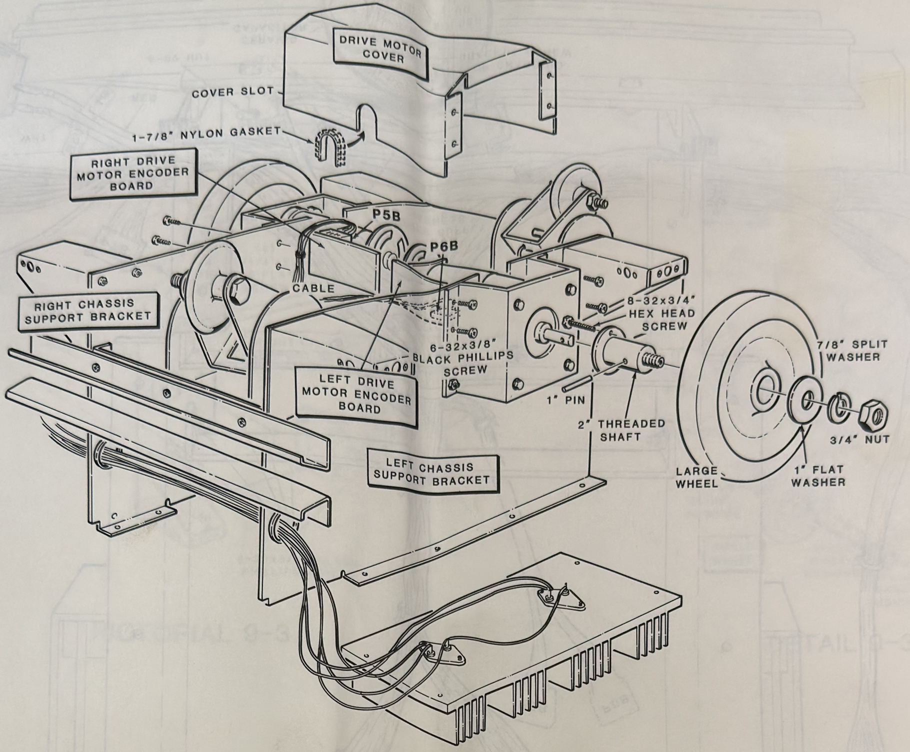

DETAIL 9-4A

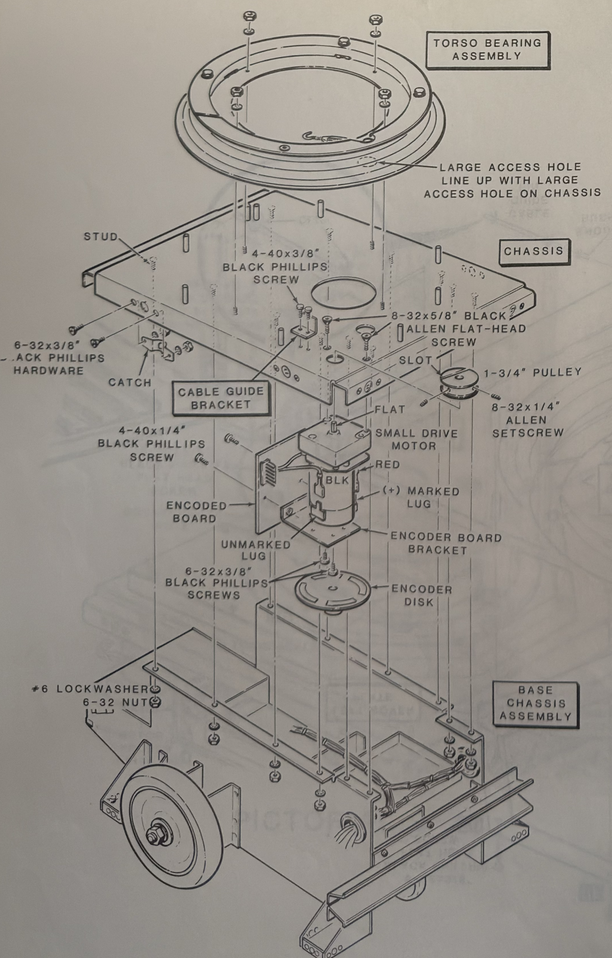

PICTORIAL 9-5

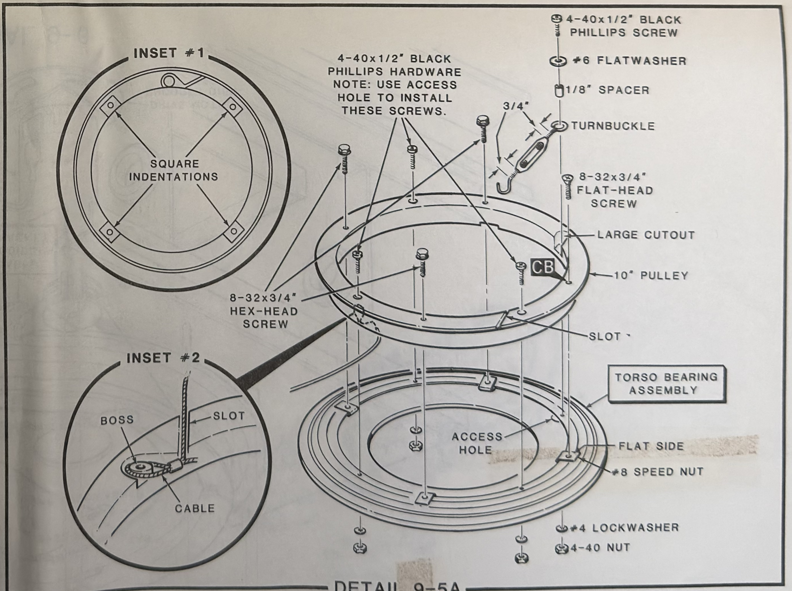

DETAIL 9-5A

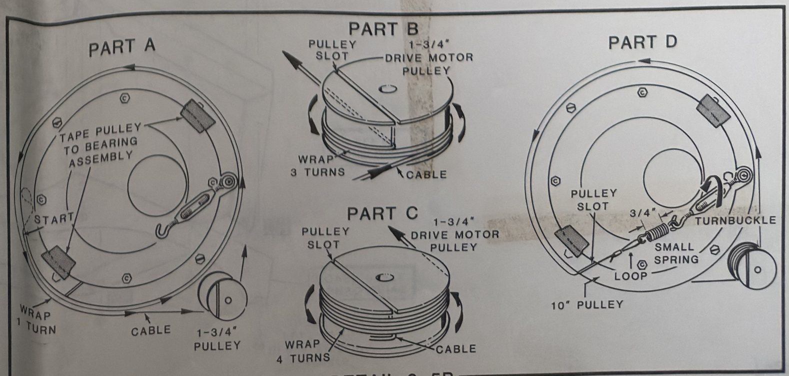

DETAIL 9-5B

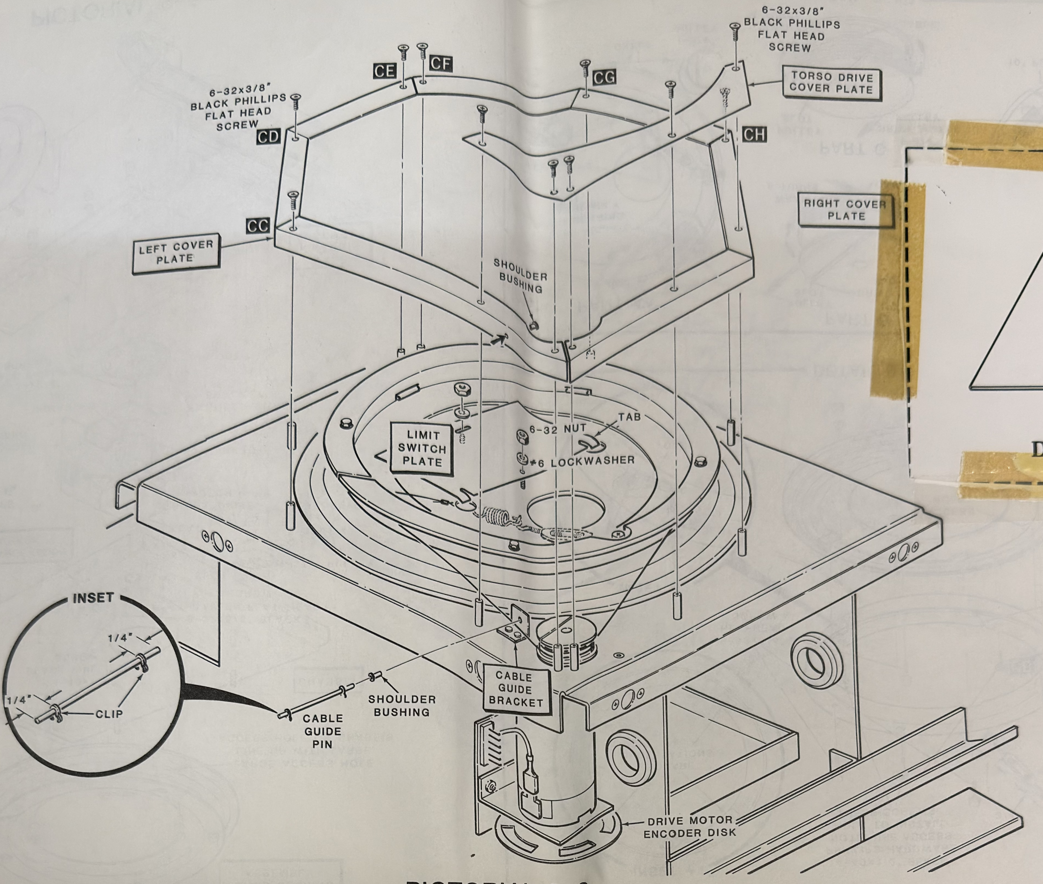

PICTORIAL 9-6

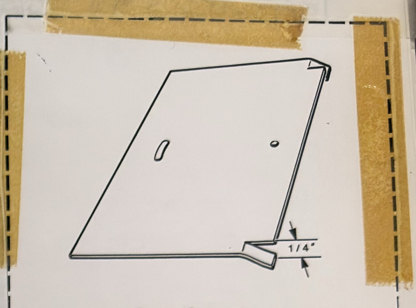

Detail 9-6A

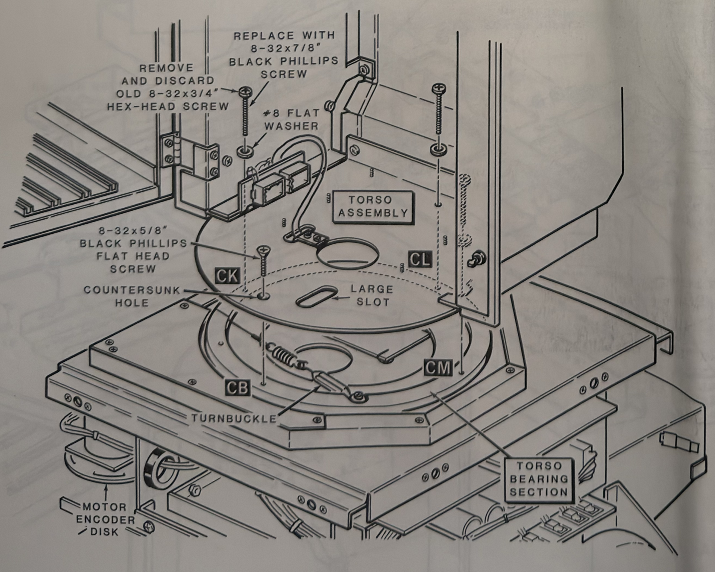

PICTORIAL 9-7

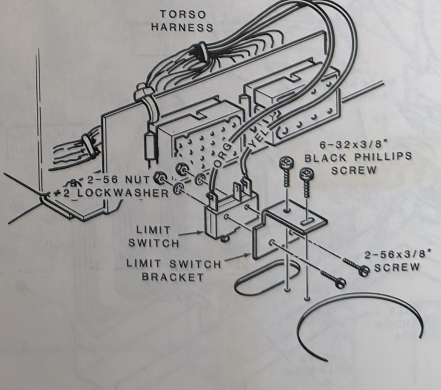

DETAIL 9-7A

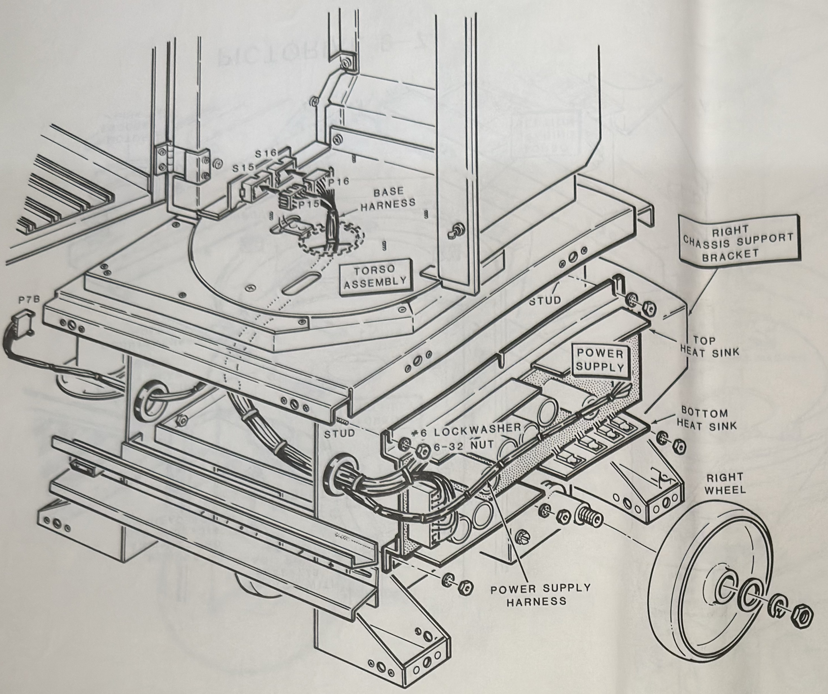

PICTORIAL 9-8

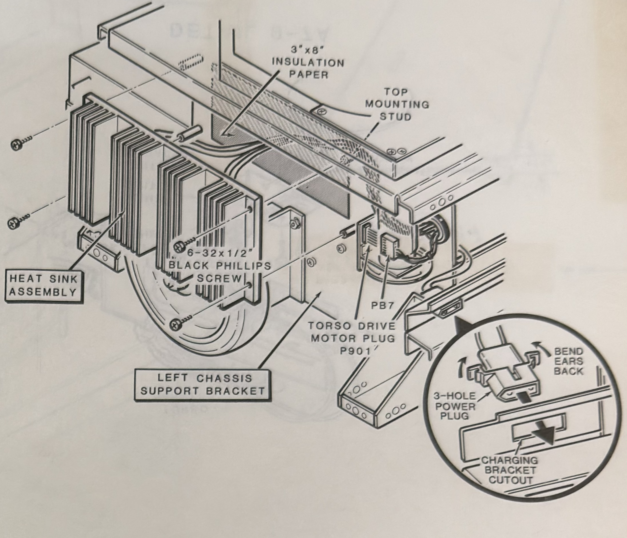

DETAIL 9-8A

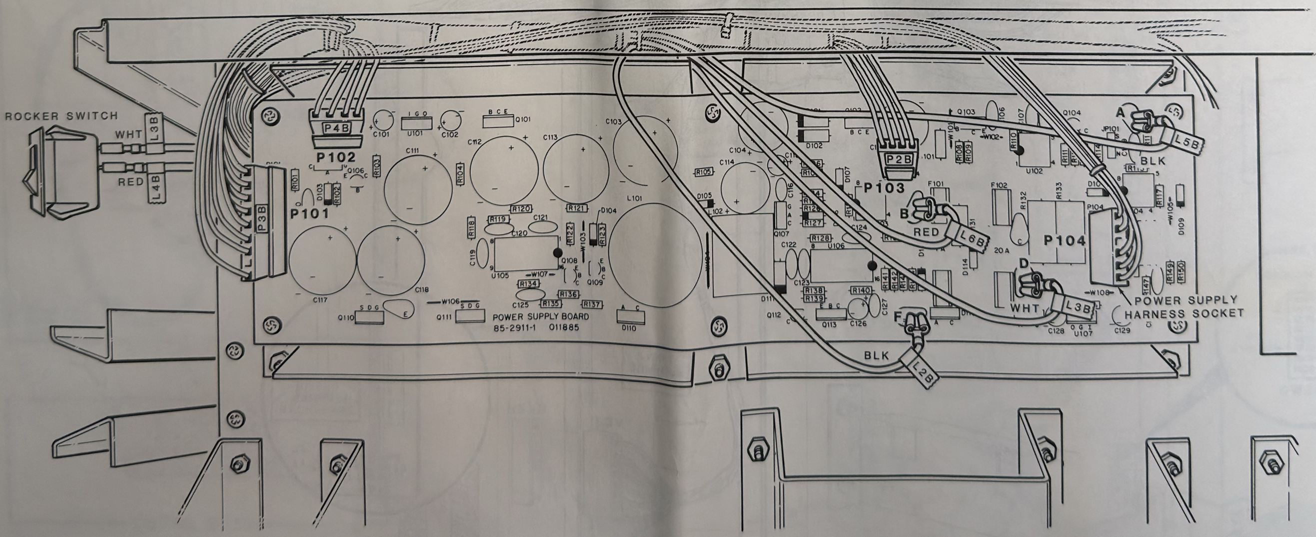

DETAIL 9-8B

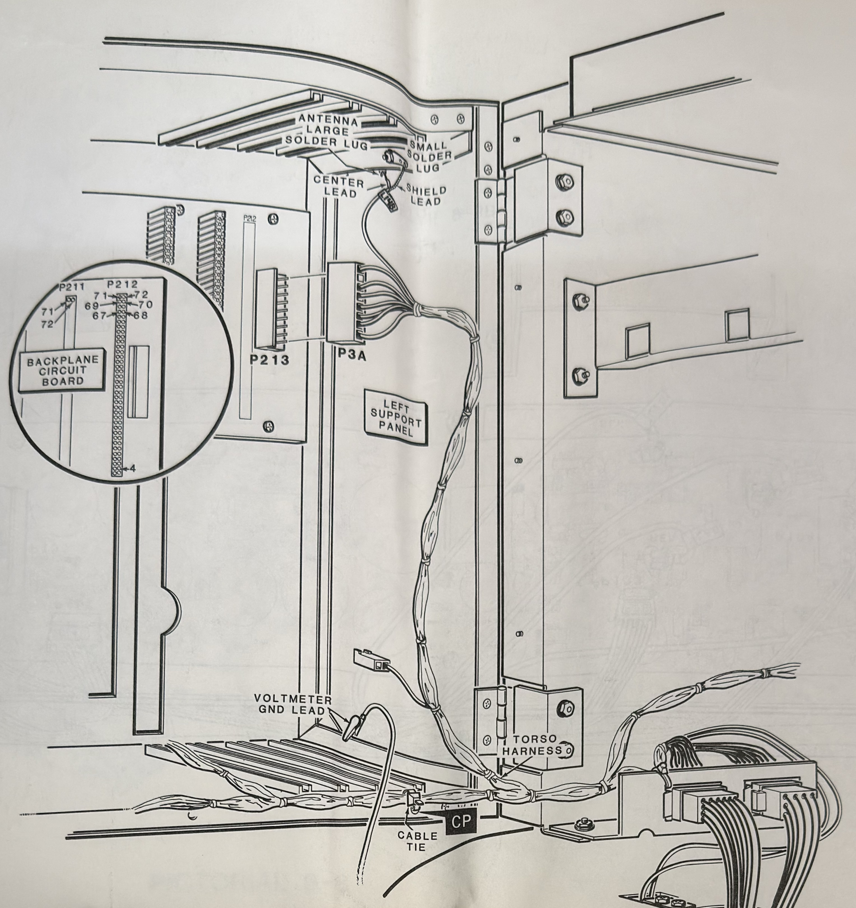

PICTORIAL 9-9

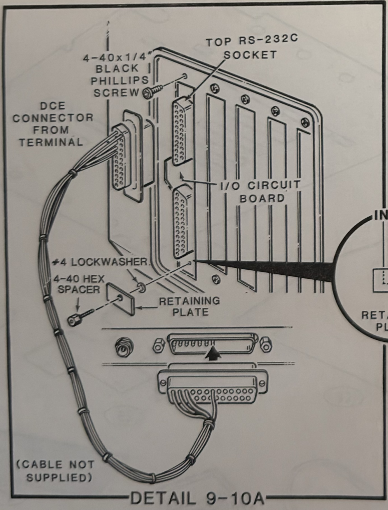

DETAIL 9-10A

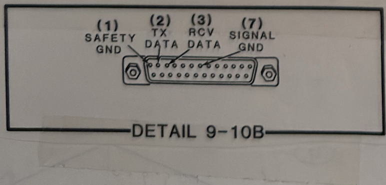

DETAIL 9-10B

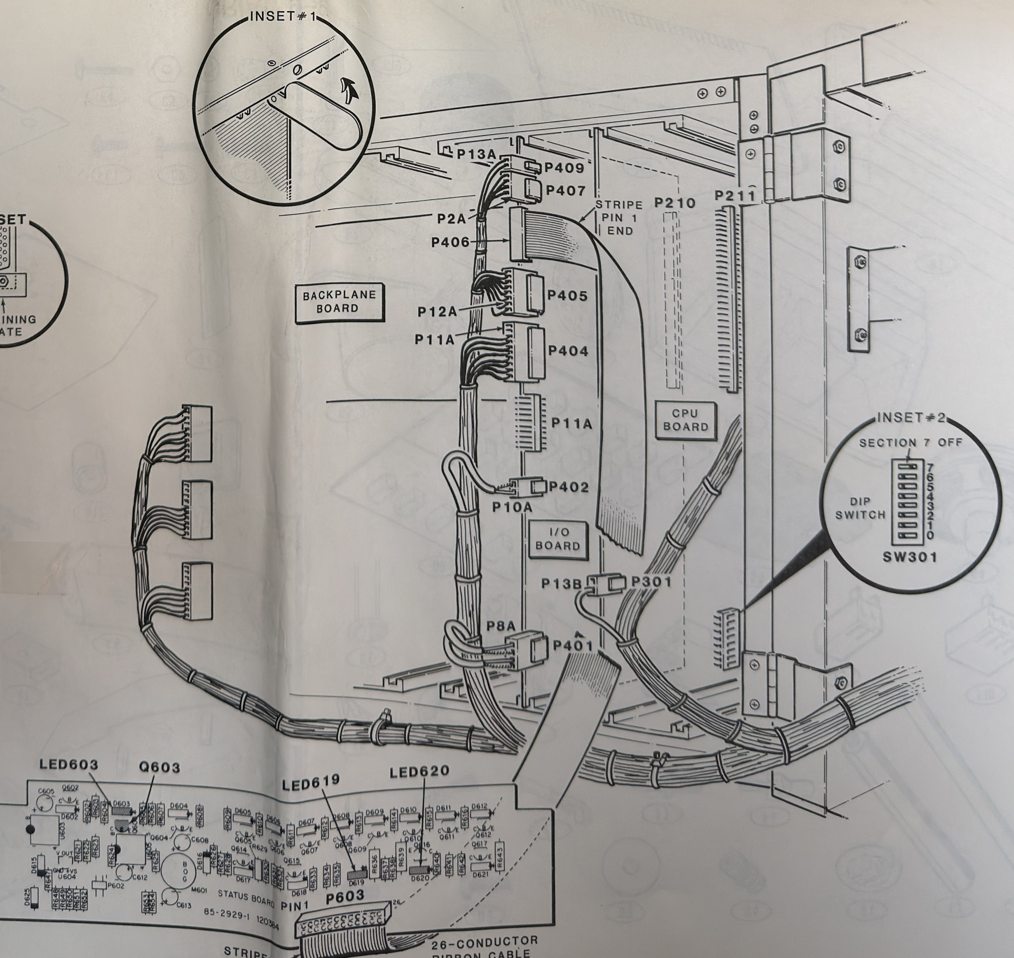

PICTORIAL 9-10

HEAD PARTS PICTORIAL

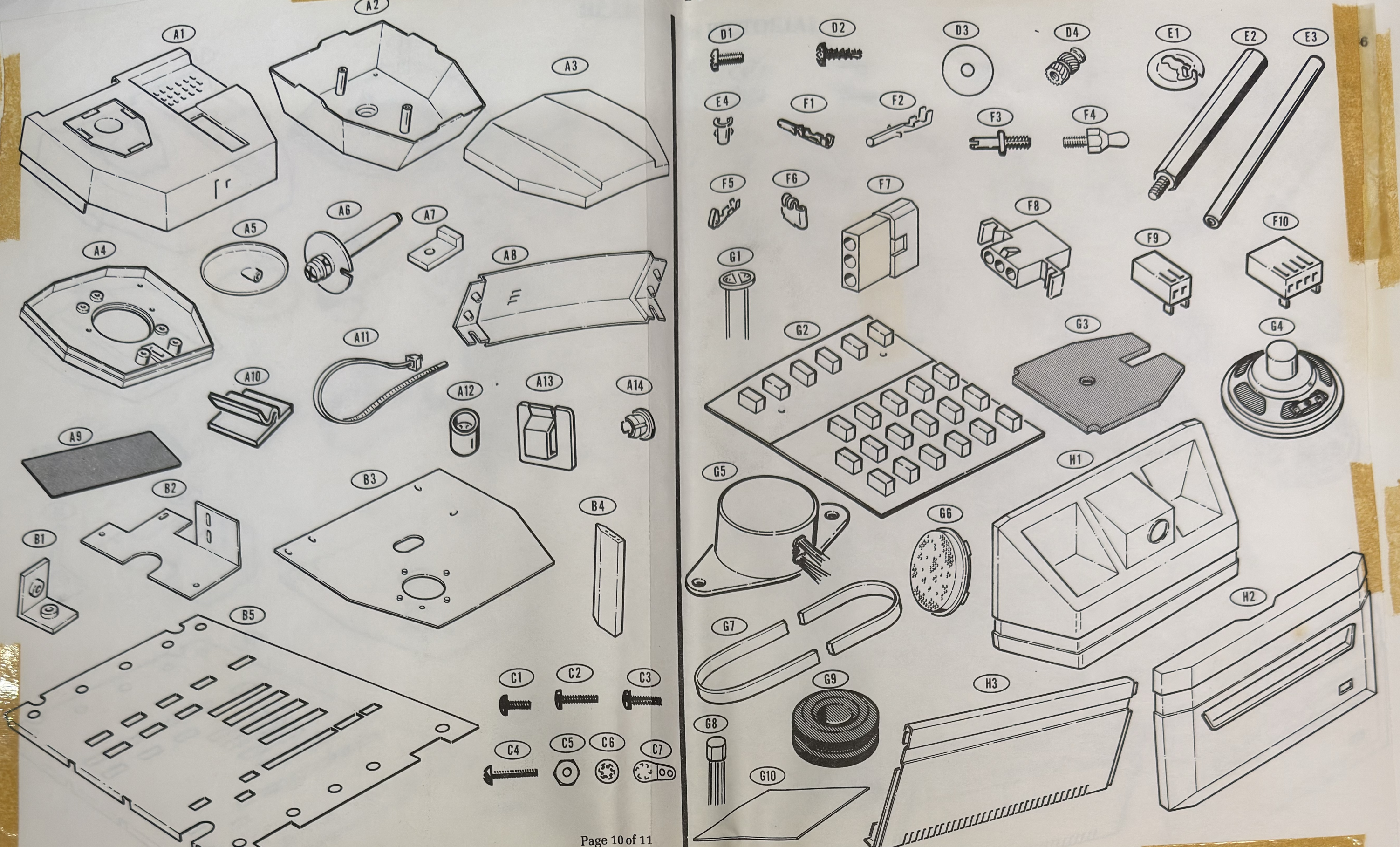

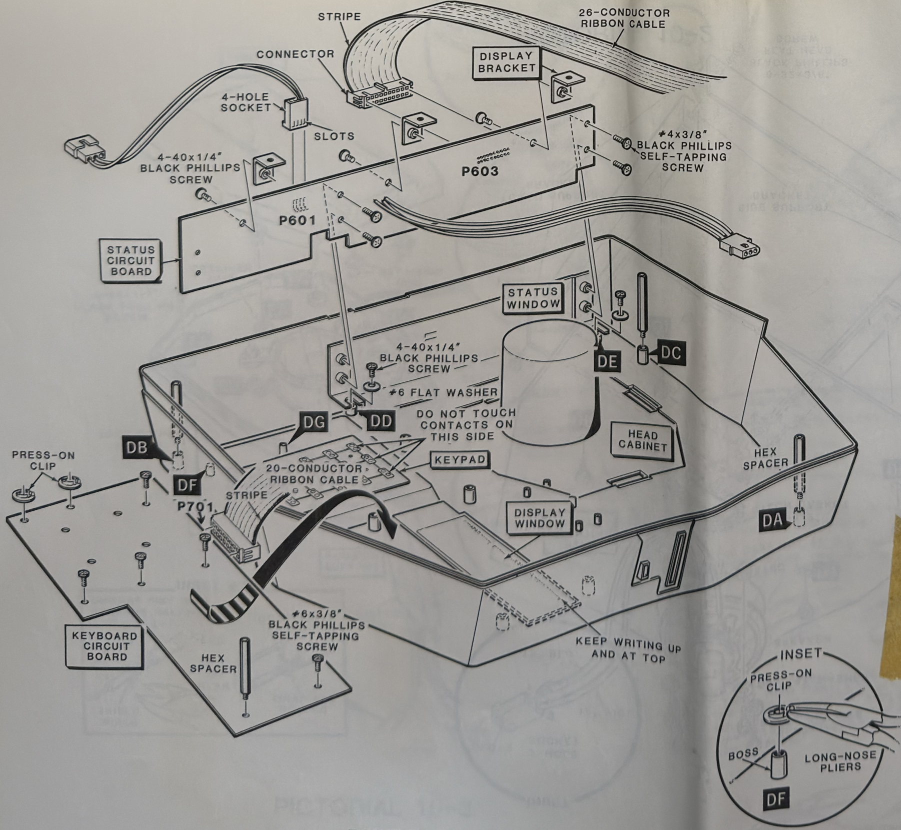

PICTORIAL 10-1

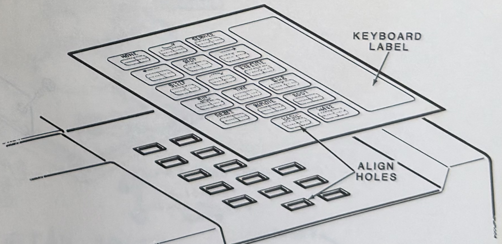

DETAIL 10-1A

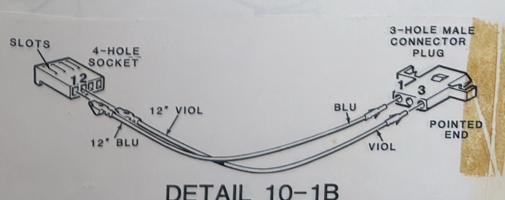

DETAIL 10-1B

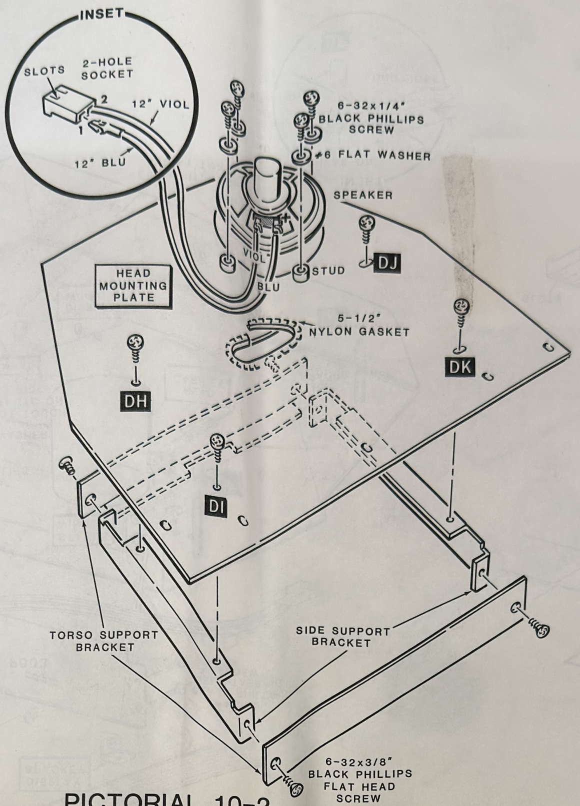

PICTORIAL 10-2

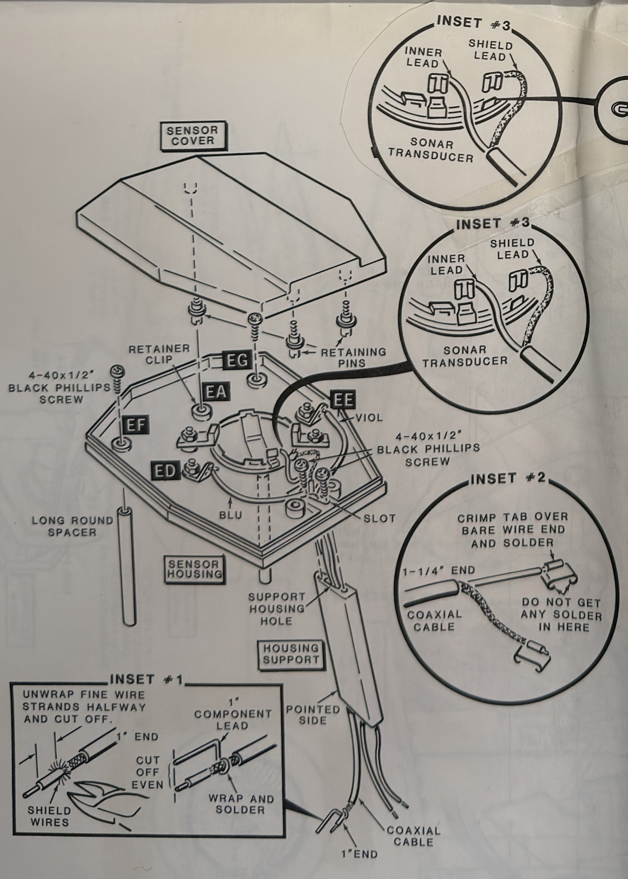

PICTORIAL 10-3

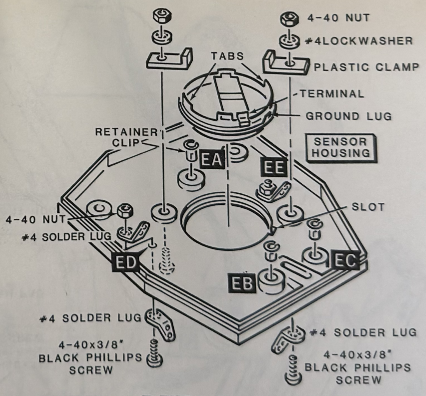

DETAIL 10-3A

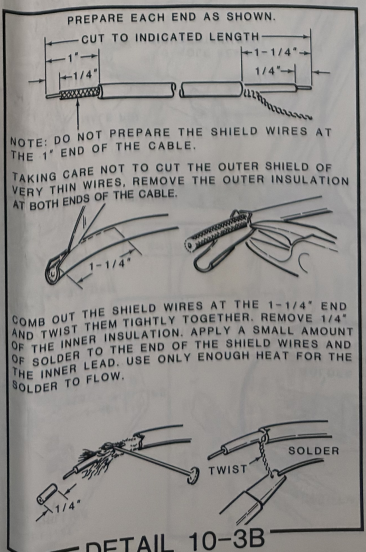

DETAIL 10-3B

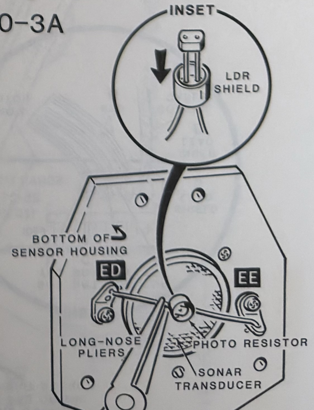

DETAIL 10-3C

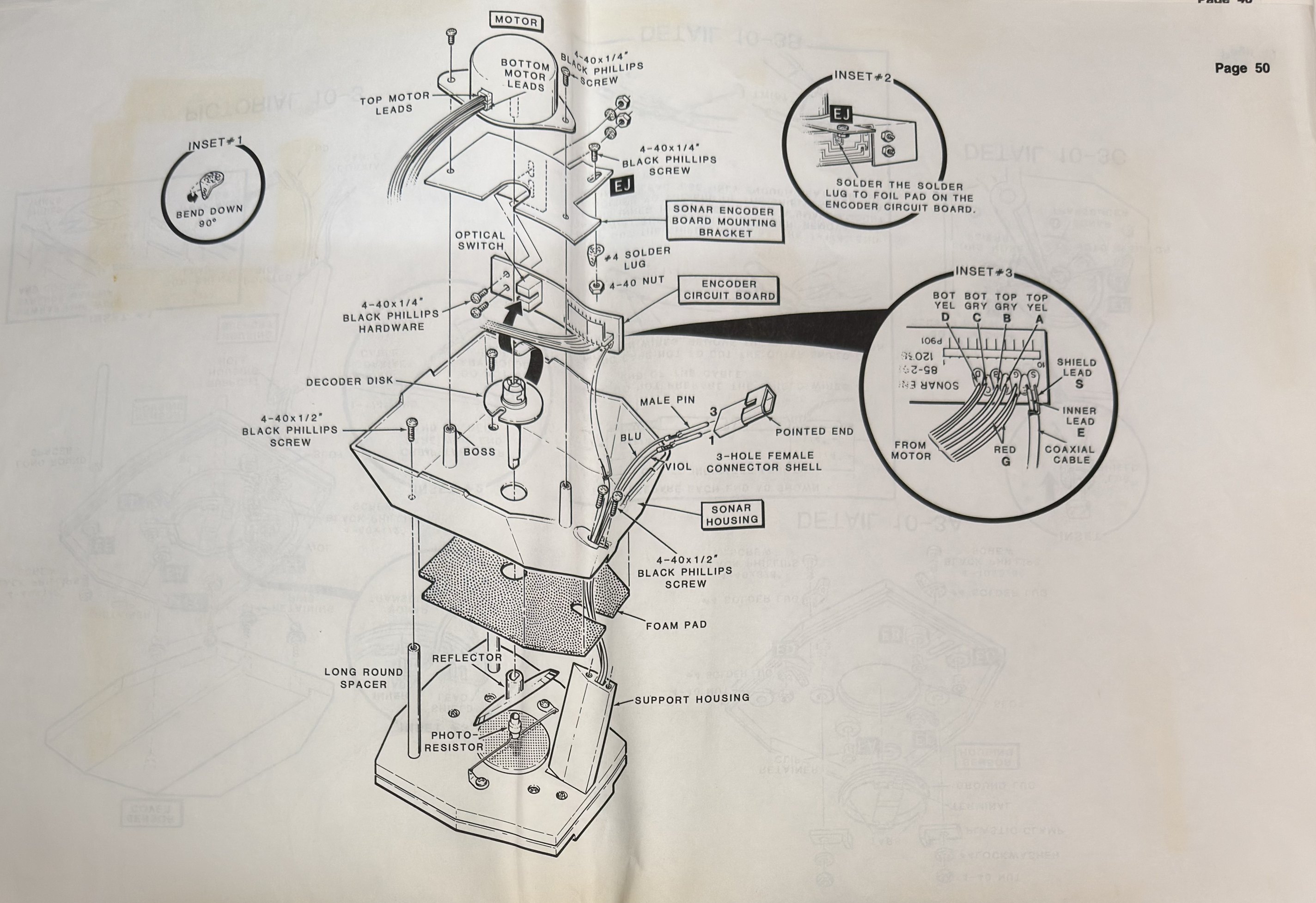

PICTORIAL 10-4

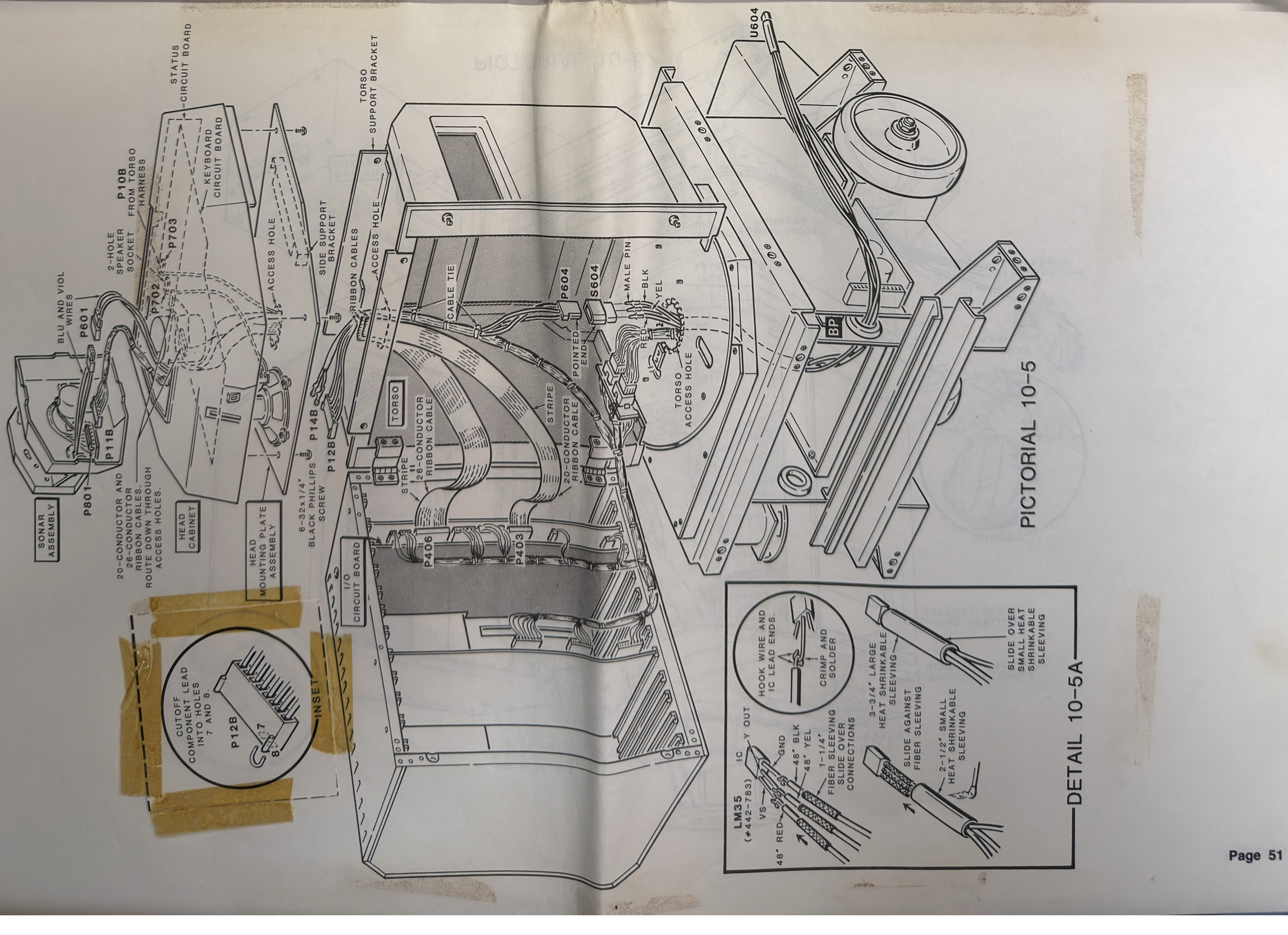

PICTORIAL 10-5

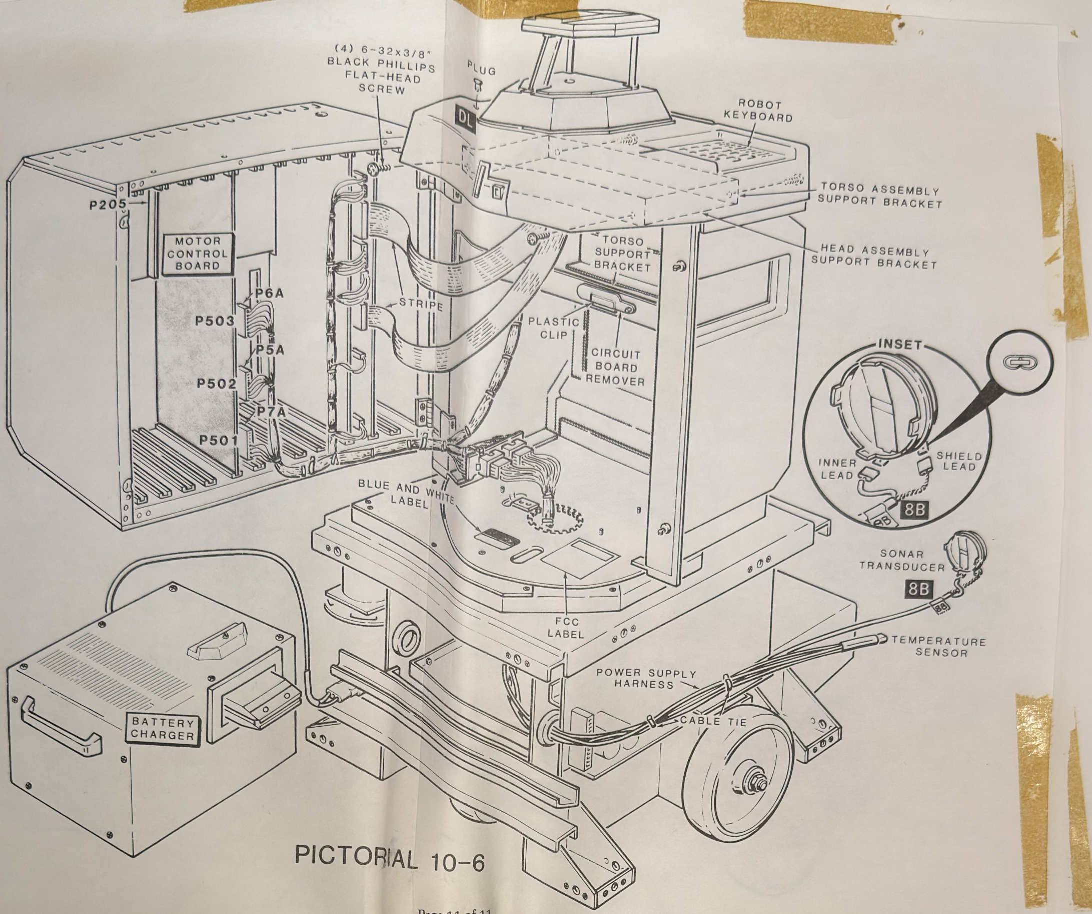

PICTORIAL 10-6

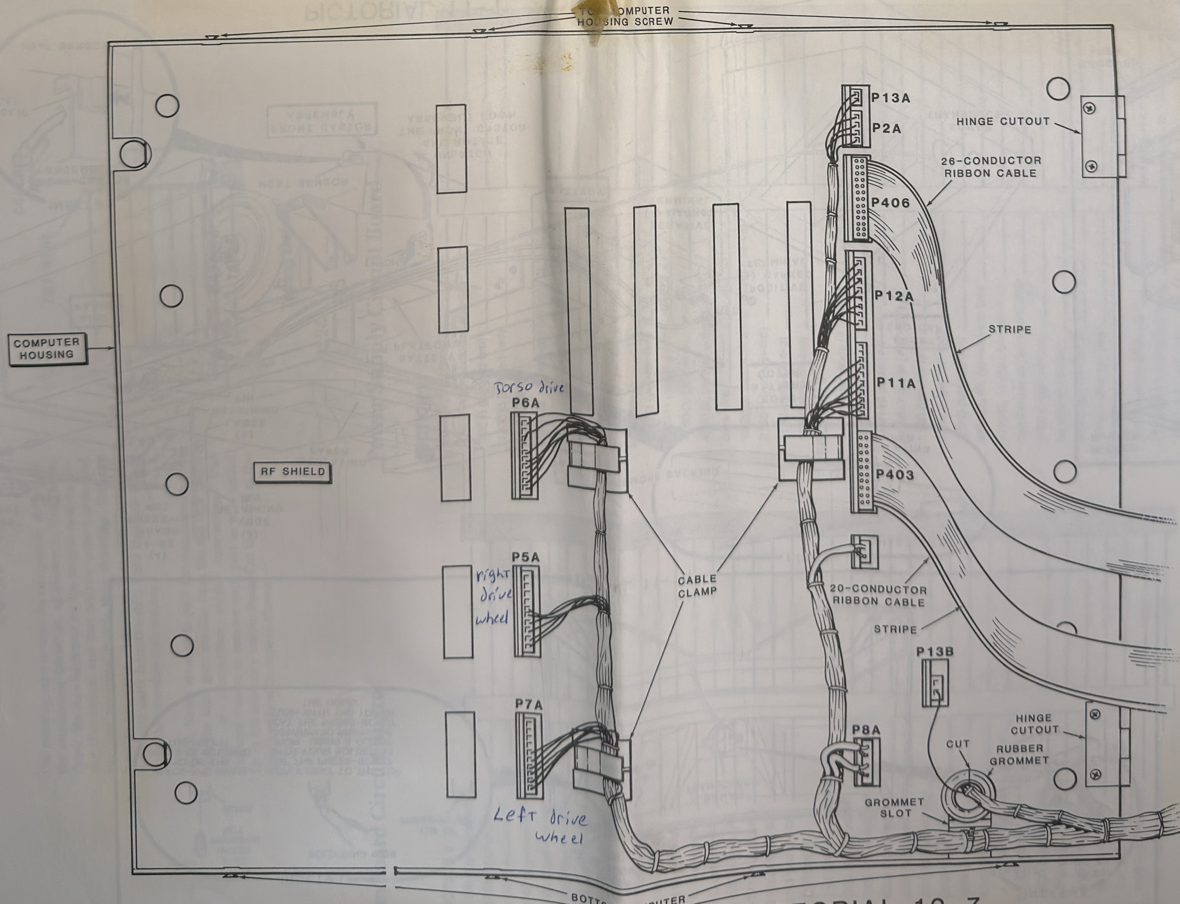

PICTORIAL 10-7

TAPED COMPONENTS CHART

Read and Follow These Instructions Before You Install the First Component.

Use masking tape to tape the component strips over the component drawings, as shown in the Taping Detail. Be sure each part on the strip is over its correct illustration; and that resistor color bands, and any part numbers, match their drawings. Cut the tape, as necessary, to align each section. Do not remove any parts from the strip until they are called for in the assembly instructions.

NOTE: Never attempt to pull the components free from the tape; gum residue from the the tape could cause an intermittent solder connection. Use diagonal cutters to remove each part as it is called for in the assembly instructions. Cut the leads at the inside edge of the tape as shown.

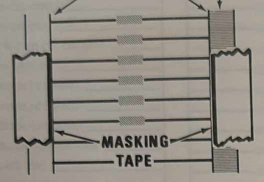

Taping Detail

Keyboard Circuit Board

SECTION 1
- 4700 Ω (yel-viol-red)
- 4700 Ω (yel-viol-red)
- 4700 Ω (yel-viol-red)
- 4700 Ω (yel-viol-red)
- 4700 Ω (yel-viol-red)
- 4700 Ω (yel-viol-red)
- 4700 Ω (yel-viol-red)
- 4700 Ω (yel-viol-red)
- .1 µF (104) axial-lead ceramic
- 27 Ω (red-viol-blk)
- 27 Ω (red-viol-blk)
- 27 Ω (red-viol-blk)
- 27 Ω (red-viol-blk)
- 27 Ω (red-viol-blk)
- 27 Ω (red-viol-blk)
- 27 Ω (red-viol-blk)
- 27 Ω (red-viol-blk)

SECTION 2
- .1 µF (104) axial-lead ceramic
- 2200 Ω (red-red-red)
- 2200 Ω (red-red-red)
- 2200 Ω (red-red-red)
- 2200 Ω (red-red-red)
- 2200 Ω (red-red-red)
- 2200 Ω (red-red-red)
- 2200 Ω (red-red-red)
- 4700 Ω (yel-viol-red)
- .1 µF (104) axial-lead capacitor

SECTION 3
- 4700 Ω (yel-viol-red)
- 4700 Ω (yel-viol-red)
- .1 µF (104) axial-lead ceramic
- 10 Ω (brn-blk-blk)
- .1 µF (104) axial-lead ceramic
- 1000 Ω (brn-blk-red)
- .1 µF (104) axial-lead ceramic

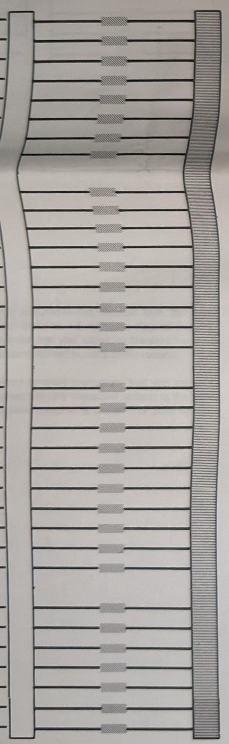

Power Supply Circuit Board

SECTION 1
- 1000 Ω (brn-blk-red)
- 1N823A zener diode (#56-~~91~~) 71
- 120 Ω (brn-red-brn)
- 1200 Ω (brn-red-red)

SECTION 2
- 5110 Ω, 1% (grn-brn-brn-brn)
- 30 kΩ (org-blk-org)
- Bare wire
- 4700 Ω (yel-viol-red)
- 4750 Ω, 1% (yel-viol-grn-brn)
- Bare wire
- 4700 Ω (yel-viol-red)
- 2700 Ω (red-viol-red)
- 4750 Ω, 1% (yel-viol-grn-brn)
- 4750 Ω, 1% (yel-viol-grn-brn)
- Bare wire
- VR20 or 1N4747A zener diode (#56-45)
- 2700 Ω (red-viol-red)
- 10 kΩ (brn-blk-org)
- 10 kΩ (brn-blk-org)

SECTION 3
- 5.6 V zener diode (#56-616)
- Bare wire
- 1N4149 diode (#56-56)
- 1N5817 diode (#57-607)
- 1 MΩ (brn-blk-grn)
- 4700 Ω (yel-viol-red)
- 120 Ω (brn-red-brn)
- 4750 Ω, 1% (yel-viol-grn-brn)
- 5110 Ω, 1% (grn-brn-brn-brn)
- 1N823A zener diode (#56-~~91~~) 71
- 4700 Ω (yel-viol-red)
- 30 kΩ (org-blk-org)
- 510 Ω (grn-brn-brn)
- 1500 Ω (brn-grn-red)

SECTION 4
- 1N4149 diode (#56-56)
- 25.5 kΩ, 1% (red-grn-grn-red)
- 1000 Ω (brn-blk-red)
- 25.5 kΩ, 1% (red-grn-grn-red)
- 4750 Ω, 1% (yel-viol-grn-brn)
- 4750 Ω, 1% (yel-viol-grn-brn)
- 25.5 kΩ, 1% (red-grn-grn-red)
- 26.1 kΩ, 1% (red-blu-brn-red)
- 1N4002 diode (#57-65)

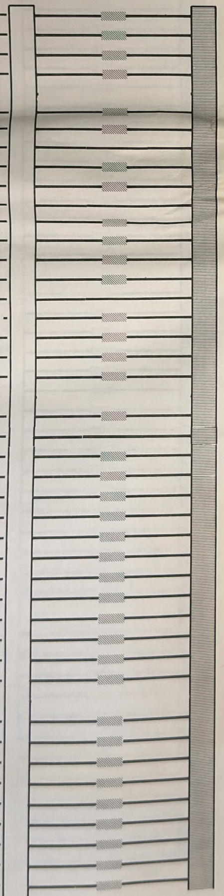

CUT HERE

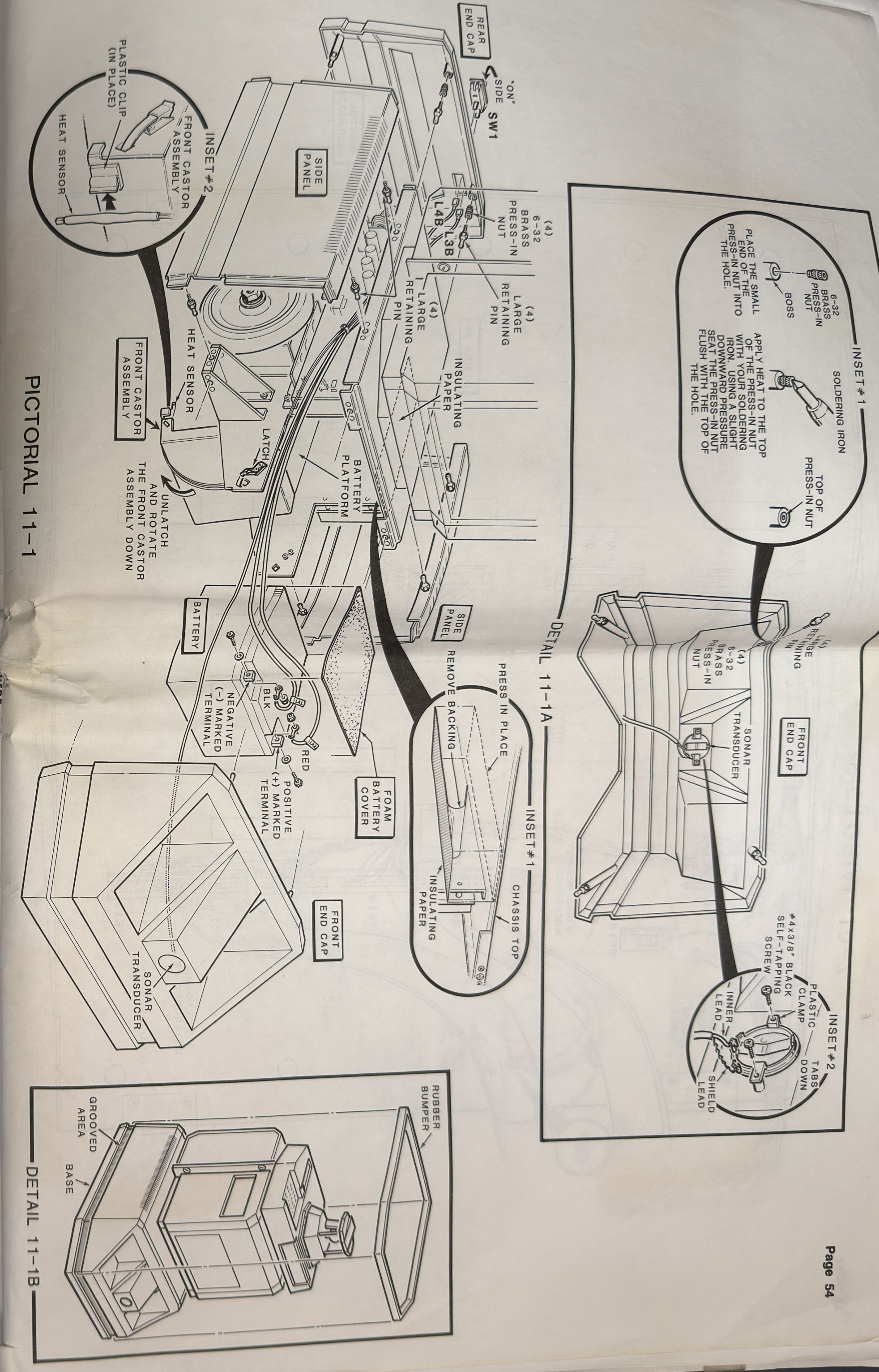

PICTORIAL 11-1

Power Supply Circuit Board (cont'd)

- Ferrite core
- Bare wire
- 470 Ω (yel-viol-brn)
- 2700 Ω (red-viol-red)
- 1N4002 diode (#57-65)
- Bare wire

SECTION 5

- 8200 Ω (gry-red-red)
- 15 kΩ (brn-grn-org)
- 15 kΩ (brn-grn-org)
- 301 kΩ, 1% (org-blk-brn-org)
- 180 kΩ (brn-gry-yel)
- 1N4002 diode (#57-65)
- Bare wire
- 10 Ω (brn-blk-blk)
- 221 kΩ, 1% (red-red-brn-org)
- 4700 Ω (yel-viol-red)
- 8200 Ω (gry-red-red)
- Bare wire
- 5.6 v zener diode (#56-616)
- 200 Ω, 1% (red-blk-blk-blk)
- 470Ω ~~1000 Ω (brn-blk-red)~~ yel-viol-brn
- 536 Ω, 1% (grn-org-blu-blk)

FOIL SIDE COMPONENTS

- 10 kΩ (brn-blk-org)
- 47 kΩ (yel-viol-org)
- .1 µF (104) axial-lead ceramic
- .1 µF (104) axial-lead ceramic

NOTE: Remove and discard the 1000 Ω (brn-blk-red) resistor from the taped strip at the second from the last location in Section 5 after you prepare the strip. Then tape the *470 Ω (yel-viol-brn)* resistor that you added to the taped components envelope (supplied with the Important Notice) in place of the resistor.

Also tape the two .1 µF (104) axial-lead ceramic capacitors that you added to the taped components envelope (supplied with the Important Notice) to the taped components chart at the last two component locations under "Foil Side Components."

Status Circuit Board

SECTION 1

- 470 Ω (yel-viol-brn)
- 8200 Ω (gry-red-red)
- Ferrite core
- 1N4002 diode (#57-65)
- 1N4002 diode (#57-65)
- 100 Ω (brn-blk-brn)
- 10 kΩ (brn-blk-org)
- 1000 Ω, 1% (brn-blk-blk-brn)
- 100 Ω (brn-blk-brn)
- 1N4149 diode (#56-56)
- 1N4149 diode (#56-56)
- 1N4149 diode (#56-56)
- 10 kΩ, 1% (brn-blk-blk-red)
- 10 Ω (brn-blk-blk)
- 1N4149 diode (#56-56)

SECTION 2

- 1N4149 diode (#56-56)
- 1N4149 diode (#56-56)
- 10 kΩ (brn-blk-org)
- 20 kΩ (red-blk-org)
- 10K ~~10 kΩ (red-blk-org)~~ brn blk org
- 20 kΩ (red-blk-org)
- 20 kΩ (red-blk-org)
- 100 kΩ (brn-blk-yel)
- 20 kΩ (red-blk-org)
- 100 Ω (brn-blk-brn)
- 3300 Ω (org-org-red)
- 27 kΩ (red-viol-org)
- 5600 Ω (grn-blu-red)
- 220 Ω (red-red-brn)
- 100 kΩ (brn-blk-yel)
- 150 Ω (brn-grn-brn)
- 27 kΩ (red-viol-org)
- 3300 Ω (org-org-red)
- 10 kΩ (brn-blk-org)
- 3300 Ω (org-org-red)
- 3300 Ω (org-org-red)

SECTION 3

- 220 Ω (red-red-brn)
- 150 Ω (brn-grn-brn)
- 150 Ω (brn-grn-brn)
- 150 Ω (brn-grn-brn)
- 150 Ω (brn-grn-brn)
- 1N4149 diode (#56-56)
- 27 kΩ (red-viol-org)
- 27 kΩ (red-viol-org)
- 150 Ω (brn-grn-brn)
- 27 kΩ (red-viol-org)
- 27 kΩ (red-viol-org)
- 27 kΩ (red-viol-org)
- 220 Ω (red-red-brn)
- 27 kΩ (red-viol-org)
- 27 kΩ (red-viol-org)
- 27 kΩ (red-viol-org)

SECTION 4

- 150 Ω (brn-grn-brn)
- 150 Ω (brn-grn-brn)
- 150 Ω (brn-grn-brn)
- 150 Ω (brn-grn-brn)
- 1800 Ω, 1/2-watt (brn-gry-red)
- 27 kΩ (red-viol-org)
- 56 kΩ (grn-blu-org)
- 1800 Ω, 1/2-watt (brn-gry-red)
- 27 kΩ (red-viol-org)
- 27 kΩ (red-viol-org)
- 56 kΩ (grn-blu-org)
- 1200 Ω, 1/2-watt (brn-red-red)

CUT HERE

Motor Controller Circuit Board

SECTION 1

10 kΩ (brn-blk-org)
10 kΩ (brn-blk-org)
10 kΩ (brn-blk-org)
10 kΩ (brn-blk-org)
10 kΩ (brn-blk-org)
10 kΩ (brn-blk-org)
10 kΩ (brn-blk-org)
10 kΩ (brn-blk-org)
10 kΩ (brn-blk-org)
10 kΩ (brn-blk-org)
10 kΩ (brn-blk-org)

SECTION 2

19 V zener diode (#56-658)
19 V zener diode (#56-658)
19 V zener diode (#56-658)
19 V zener diode (#56-658)
19 V zener diode (#56-658)
19 V zener diode (#56-658)
19 V zener diode (#56-658)
19 V zener diode (#56-658)
19 V zener diode (#56-658)
19 V zener diode (#56-658)
19 V zener diode (#56-658)
19 V zener diode (#56-658)
10 kΩ (brn-blk-org)
10 kΩ (brn-blk-org)
10 kΩ (brn-blk-org)
10 kΩ (brn-blk-org)
10 kΩ (brn-blk-org)
10 kΩ (brn-blk-org)
10 kΩ (brn-blk-org)
10 kΩ (brn-blk-org)
10 kΩ (brn-blk-org)
10 kΩ (brn-blk-org)
10 kΩ (brn-blk-org)
10 kΩ (brn-blk-org)
10 kΩ (brn-blk-org)
10 kΩ (brn-blk-org)
10 kΩ (brn-blk-org)
10 kΩ (brn-blk-org)
10 kΩ (brn-blk-org)
10 kΩ (brn-blk-org)
10 kΩ (brn-blk-org)
10 kΩ (brn-blk-org)
10 kΩ (brn-blk-org)
10 kΩ (brn-blk-org)
10 kΩ (brn-blk-org)
10 kΩ (brn-blk-org)
10 kΩ (brn-blk-org)

SECTION 3

.1 μF (104) axial-lead ceramic
.1 μF (104) axial-lead ceramic
.1 μF (104) axial-lead ceramic
.1 μF (104) axial-lead ceramic
.1 μF (104) axial-lead ceramic
.1 μF (104) axial-lead ceramic
.1 μF (104) axial-lead ceramic
.1 μF (104) axial-lead ceramic
.1 μF (104) axial-lead ceramic

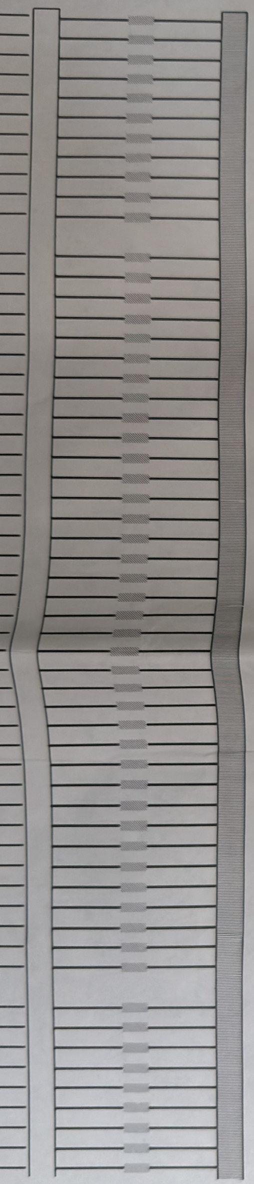

SECTION 4

4700 Ω (yel-viol-red)
4700 Ω (yel-viol-red)
4700 Ω (yel-viol-red)
4700 Ω (yel-viol-red)
4700 Ω (yel-viol-red)
4700 Ω (yel-viol-red)
510 Ω (grn-brn-brn)
510 Ω (grn-brn-brn)

SECTION 5
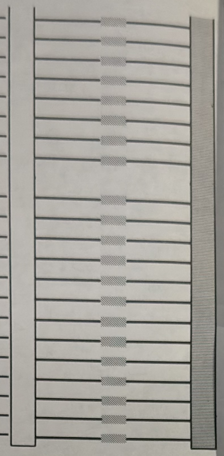
.1 μF (104) axial-lead ceramic capacitor
.1 μF (104) axial-lead ceramic capacitor
.1 μF (104) axial-lead ceramic capacitor
.1 μF (104) axial-lead ceramic capacitor
.1 μF (104) axial-lead ceramic capacitor
.1 μF (104) axial-lead ceramic capacitor
.1 μF (104) axial-lead ceramic capacitor
.1 μF (104) axial-lead ceramic capacitor
.1 μF (104) axial-lead ceramic capacitor
.1 μF (104) axial-lead ceramic capacitor
4700 Ω (yel-viol-red)
4700 Ω (yel-viol-red)
4700 Ω (yel-viol-red)